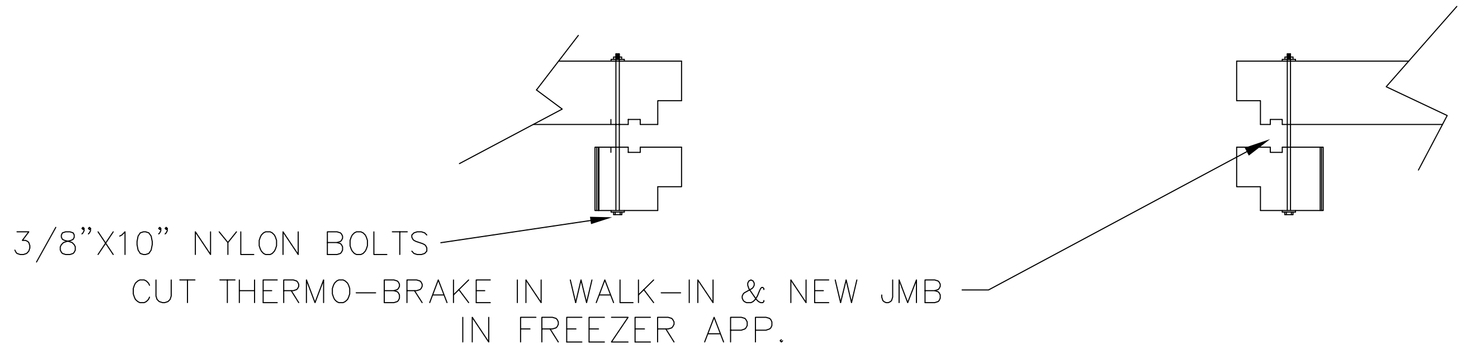

COOLER DOOR - SMALL PARTS BOX

8 ----- 791567 ----- 3/8" NYLON BOLT
16----- 247451075 ----- 3/8" NYLON NUTS
16----- 1562 ----- 3/8" NYLON WARSHERS
1----- 282461075 ----- GRAY SILICONE
1--- 500000133 DIAL THEM. (SHIP LOOSE)
5---- 189161075 ----- CLIP THEM.
5---- 266678803 ----- SCREWS #10X3/4"

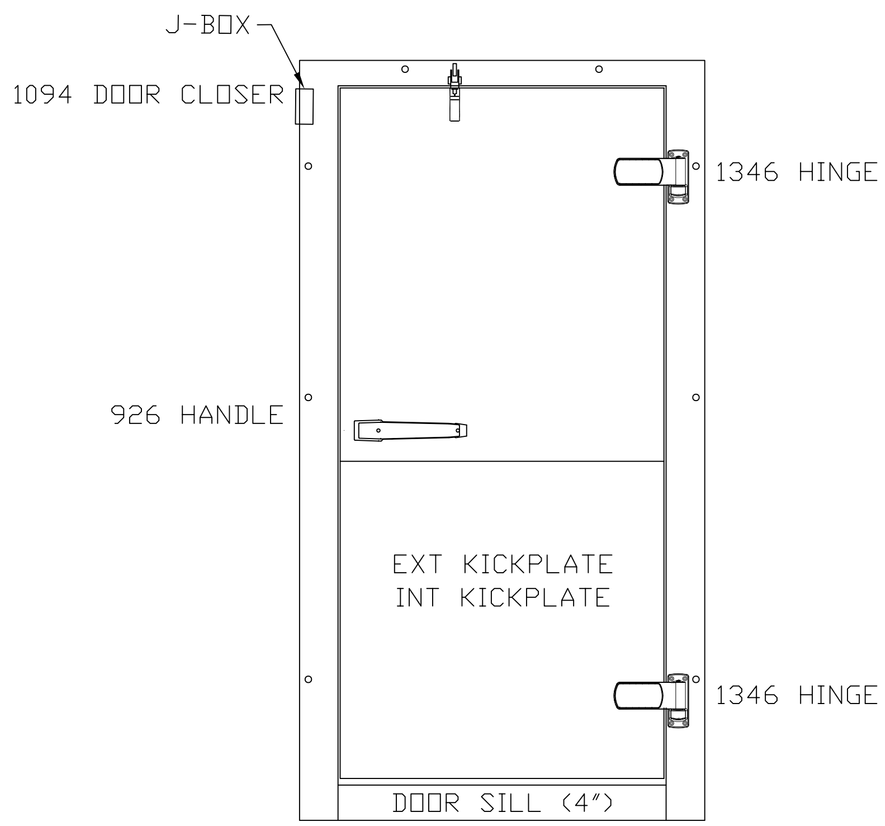

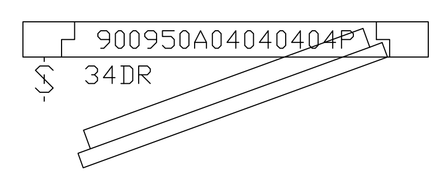

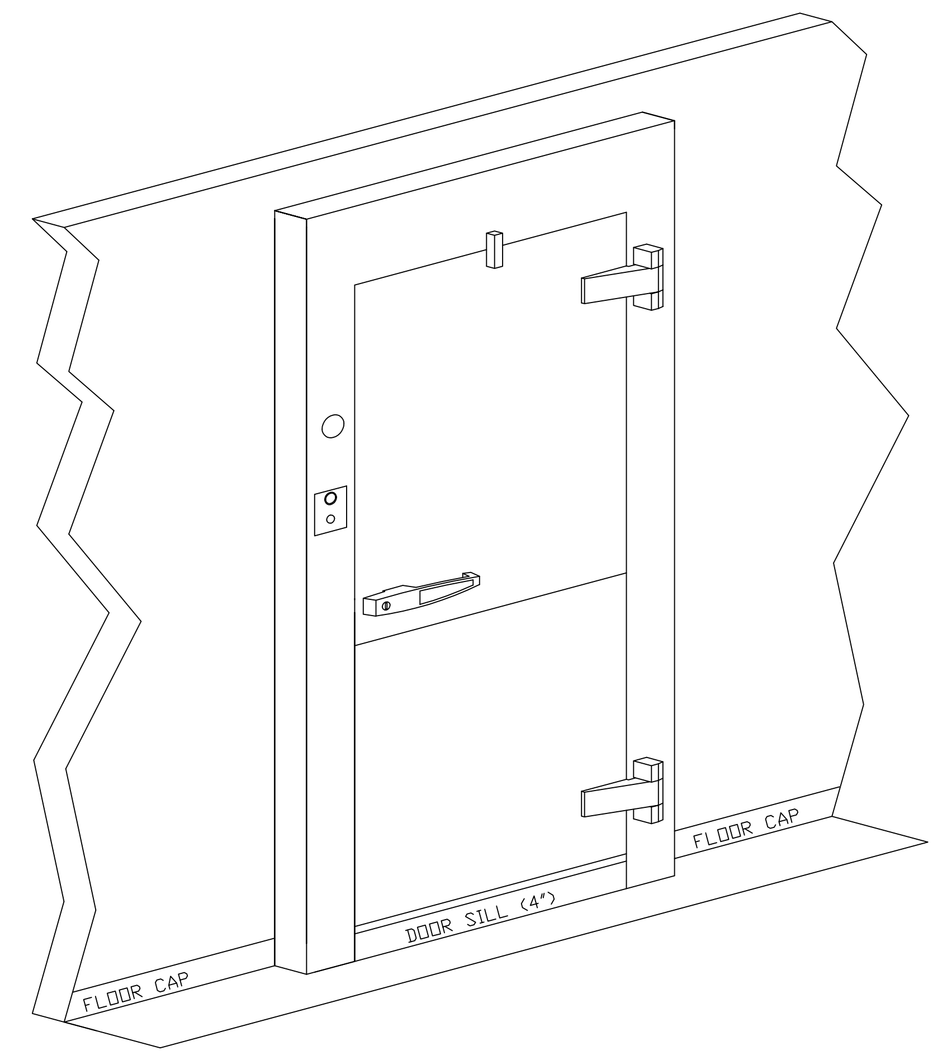

COOLER 900950A04040404P

46X86.25DS 34X78DR RH FLT CLR
DOOR FRAME=GL/GL DOOR PLUG=GL/GL
115/60/1 - 1.0 AMPS

Print Used As Worksheet Only
Not a Control document
Valid 10 Days Before or 10 Days
After Scheduled Production Date

QTY	DESCRIPTION
1	----- 900952A04040404P ----- 34" X 78" L DOOR ASSEMBLY

ORDER#_____

SYM	REVISION	BY	DATE

DRAWING NO. 900950

Kolpak
2915 TENNESSEE AVENUE NORTH
P.O. BOX 550
PARSONS, TN. 38363
(731) 847-6361

DRAWN: DSB
CUSTOMER: COOLER BOLTOVER DOOR SECTION
CHECKED: DC/DT
PROJECT: BOLTOVER DOOR SECTION RH (4" SILL)
DATE: 5/30/17
SCALE: 3/8"=1'-0"
SHEET: 1 OF: 1