Your Solutions Partner

Specifications

F.O.B. Sedalia, Missouri 65301

HB3CI

OPTIONS:

- ☐ 8" deep liner in lieu of 5" deep
- ☐ Internal locking device
- ☐ False bottom
- ☐ Hot food style top - HFST - _____
- ☐ 1-color laminate on body/second color laminate on tray slide
- ☐ Laminate finish other than standard eight (8) finishes
- ☐ Enclosed storage
- ☐ Intermediate Shelf
- ☐ Kickplates (stainless) (painted) (laminiate to match body)
- ☐ End shelf
- ☐ Bread and cheese board
- ☐ Legs in lieu of casters
- ☐ Trayslides
- ☐ Foodshields

Approval Stamp(s):

PRODUCT INFORMATION:

PROJECT: _____

ITEM: _____

QUANTITY: _____

MODEL:

HERITAGE BUFFET

COLD PANS - ICE COOLED-5" DEEP

- HB3CI 46" length unit
- HB4CI 60" length unit
- HB5CI 74" length unit

TOP:

- Heavy gauge, 300 Series stainless steel
- Flanged down 2" on all four sides

BODY:

- Heavy gauge paint grip steel
- Laminate patters: Available upon request
- Stainless steel trim strips on corners
- Flanged and channeled edges for strength
- Welded together with reinforcements
- Mounted on NSF listed 5" diameter swivel casters, two with locks, all non-marking polyurethane tires

ICE PAN SECTION:

- 18 gauge, 300 Series stainless steel liner
- 1" cast brass drain and plug
- Insulated on all four sides and bottom
- 5" deep pan liner

AGENCY LISTING:

NSF

DUKE MANUFACTURING CO.
2305 N. Broadway
St. Louis, MO 63102
800.735.3853 Toll Free
314.231.5074 Fax
www.dukemfg.com

Specification subject to change

WARNING: Cancer and Reproductive Harm - www.p65warnings.ca.gov

HERITAGE®

HERITAGE BUFFET
COLD PANS - ICE COOLED-5" DEEP

A.I.A. File No. 35-C-13

Catalog No. HBU-ICE5

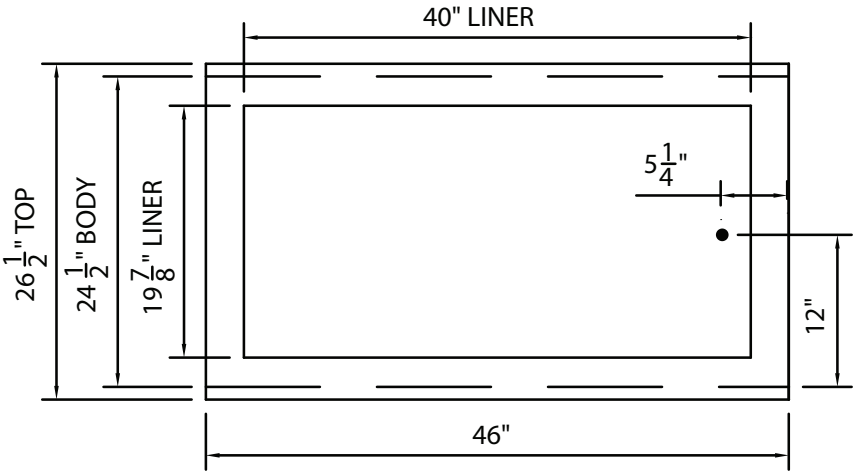

TOP VIEW

LEGEND

● - DRAIN LOCATION

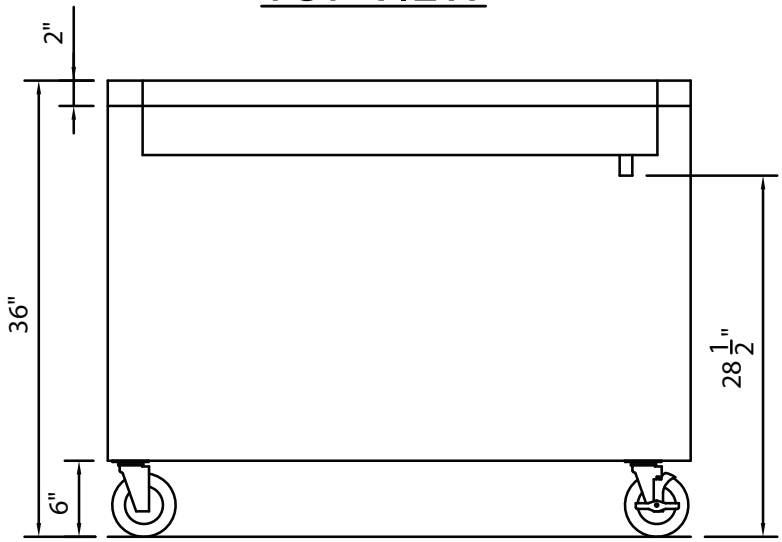

FRONT VIEW

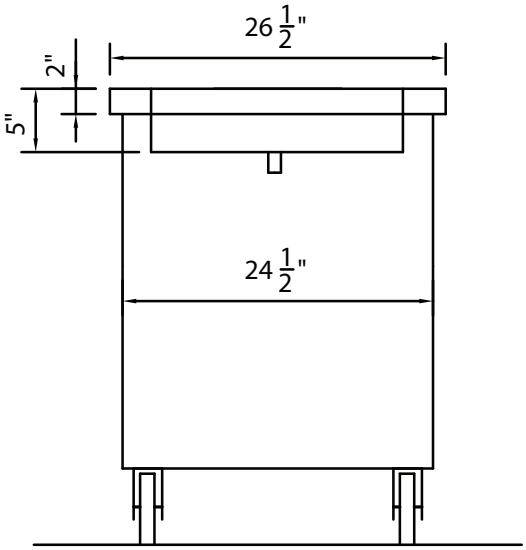

RIGHT SIDE VIEW

HERITAGE BUFFET - COLD PAN - ICE -5" DEEP

DIMENSIONS: All Units 26-1/2 (67.3 cm) Wide & 36" (91.4 cm) Tall FREIGHT CLASS: 150

Model	Length		Cold Pan Size						Cube ft. crated	Weight	
			L		W		D				
	in	cm	in	cm	in	cm	in	cm		lbs	kg
HB3CI	46	116.8	40	101.6	19-7/8	50.6	5	12.7	36.0	360	163.6
HB4CI	60	152.4	54	137.2	19-7/8	50.6	5	12.7	45.7	480	218.2
HB5CI	74	188.0	68	172.7	19-7/8	50.6	5	12.7	55.4	600	272.7

Duke Your Solutions Partner

Duke Manufacturing Co.
2305 N. Broadway
St. Louis, MO 63102

Phone: 314-231-1130
Toll Free: 1-800-735-3853
Fax: 314-231-5074

www.dukemfg.com

Printed in U.S.A
© 2020, Duke Manufacturing Co.