# M-10362 3

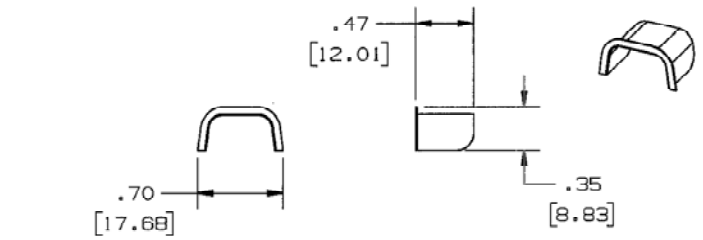


BUSHING FOR HBL500 SERIES
CAT. NO. HBL502B

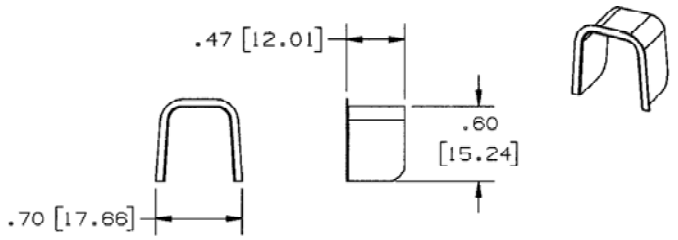


BUSHING FOR HBL750 SERIES
CAT. NO. HBL702B

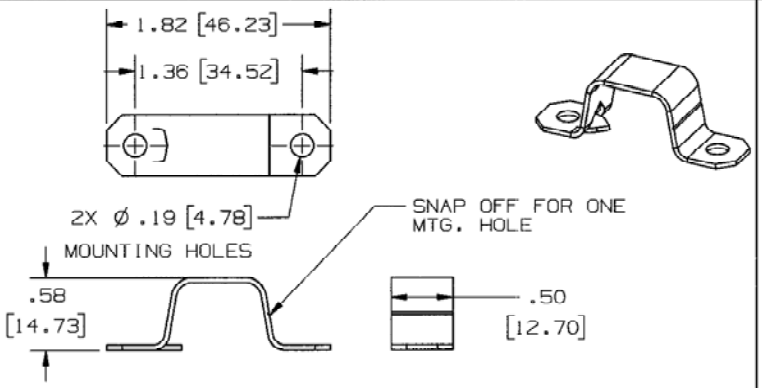


BRACKET FOR HBL500 SERIES
COLOR IVORY CAT. NO. HBL504IV
COLOR-WHITE CAT. NO. HBL504W

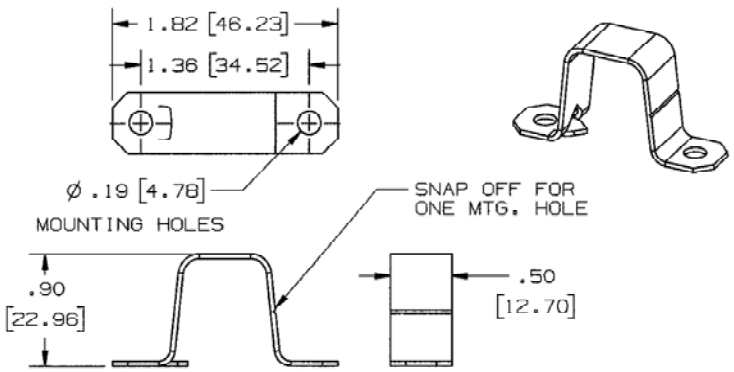


BRACKET FOR HBL750 SERIES
COLOR-IVORY CAT. NO. HBL704IV
COLOR-WHITE CAT. NO. HBL704W

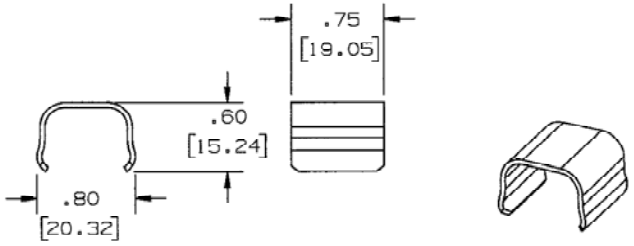


CONNECTION COVER FOR HBL500 SERIES
COLOR-IVORY CAT.NO. HBL506IV
COLOR-WHITE CAT.NO. HBL506W

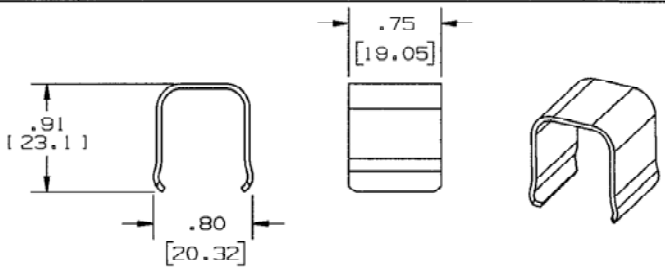


CONNECTION COVER FOR HBL750 SERIES
COLOR-IVORY CAT. NO. HBL706IV
COLOR-WHITE CAT. NO. HBL706W

NOTE: ALL DIMENSION IN INCHES AND [MM]

CODE 74545

LIST OF PARTS

| DESCRIPTION | MATERIAL | FINISH |
|---|---|---|
| BUSHING | STEEL | GALVANIZED |
| BRACKET | STEEL | PAINTED |
| CONNECTION COVER | STEEL | PAINTED |

| SYM | REVISIONS | APP | DATE |
|---|---|---|---|
| 3 | ADDED CAT. NO'S HBL506W & HBL504W PER DCN 15218 RCM | DJP | 10/29/08 |
| 2 | ADDED CAT. NO'S HBL704W & HBL706W PER DCN 13745 RCM | DJP | 2/27/07 |
| 1 | RELEASED PER DCN13536 | SRE | 11/13/06 |

THE DESIGN AND DIMENSIONS OF THE PRODUCT SHOWN ON THIS DRAWING ARE SUBJECT TO CHANGE WITHOUT NOTICE

TITLE
METAL RACEWAY
MICS. PARTS
HBL500/HBL750 SERIES

TOLERANCES UNLESS OTHERWISE SPECIFIED
FRACTIONS ±1/64
DECIMALS ±.005
ANGLES ±2°

WIRING DEVICE-KELLEMS
HUBBELL INCORPORATED
BRIDGEPORT, CT

DR. BY SRE | APP. BY SRE
TR. BY | SCALE NONE
CHK'D BY SRE | DATE 11-13-06

DIMENSION SHEET FOR CAT. NO. SEE TABLE

REPAIRABLE ☐ NON-REPAIRABLE ☒

B

M-10362

(1)