SCREW: NONE	MATERIAL:NONE	REV: A	
CAT. NO.: ILD-125	PLATING: NONE	DRAWN BY:CLH	SCALE:
INFORMATION SHEET:NONE	MARKING: SEE DRAWING	DATE:1/18/2008	SIZE: B

ILSCO connections matter
800-776-9775 www.ilsco.com

DWG NO: R1829

SHEET: 1 OF 1

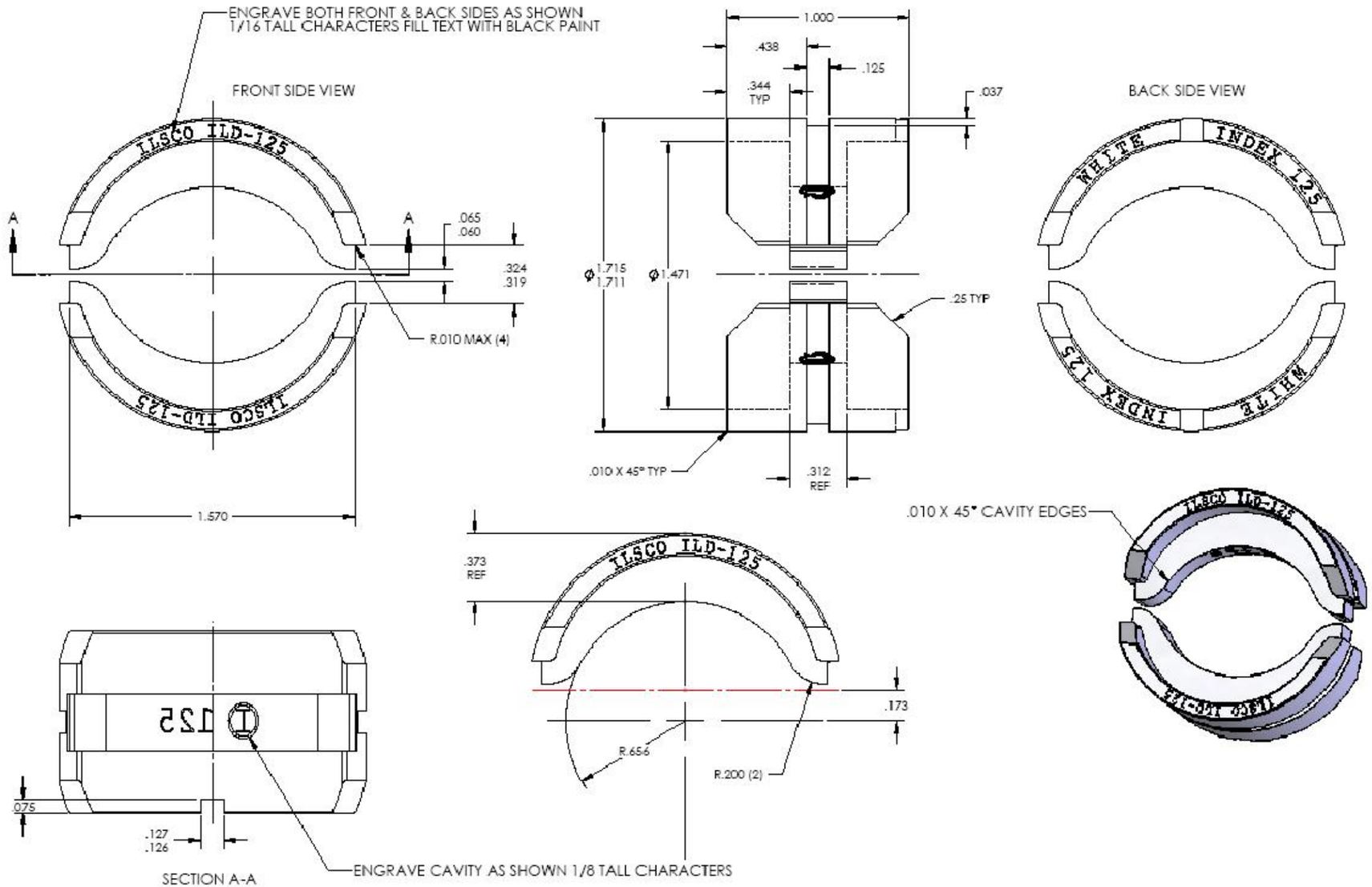

THE INFORMATION CONTAINED WITHIN THIS DOCUMENT IS PROPRIETARY TO ILSCO AND MAY NOT BE DISCLOSED WITHOUT PRIOR WRITTEN CONSENT