ORDER ONLINE

numatics®

Air Prep

Air Preparation Group

FRLs and Accessories

We're everywhere you need us to be!

ORDER ONLINE

FRLs and Accessories

table of contents

An introduction to Numatics **2**
The FlexiBlok® advantage **4**
The Numatics filtration advantage **6**
Application and installation information **8**
Ease of assembly **10**
Guide to using this catalog **11**

FlexiBlok® FRL Series **13**
StockBlok® & ModuBlok™ Combinations 14
14/22/32 Series Particulate Filters 20
14/22/32 Series Coalescing Filters 22
14/22/32 Series Regulators 24
14 Series Manifold Regulators 26
22/32 Series Pilot Operated Regulators 28
14/22/32 Series Particulate Filter/Regulators 30
14/22/32 Series Coalescing Filter/Regulators 32
14/22/32 Series Lubricators 34
22/32 Series Solenoid Soft Start Quick Exhaust Valve 36
22/32 Series Solenoid Quick Exhaust Valve 38
14/22/32 Series Shut-Off Valve 40
14/22/32 Series Diverter Block 40
22/32 Series Diverter Plates 41
32 Series Rear-Ported End Plates 41

High Flow FRL Series **43**
50 Series Filters 44
50 Series Regulators 45
50 Series Pilot Operated Regulators 46
50 Series Lubricators 48
50 Series Combinations 49

Stainless Steel FRL Series **51**
70 Series Stainless Steel Particulate Filters 52
70 Series Stainless Steel Coalescing Filters 53
70 Series Stainless Steel Regulators 54
70 Series Stainless Steel Particulate Filter/Regulators 55
70 Series Stainless Steel Lubricators 56
71 Series Stainless Steel Miniature Filters, Regulators, Filter/Regulators 57

Delta Series™ Filters **59**
Water Separators 60
900 Series 3.0 Micron Particulate Grade Filters 61
900 Series 1.0 Micron Coarse Grade Filters 62
900 Series 0.3 Micron Fine Grade Filters 63
900 Series 0.01 Micron Ultra Fine Grade Filters 64
900 Series Adsorbing Grade Filters 65
Options and accessories 67

High Flow Filter Series **69**
600 Series 3.0 Micron Particulate Grade Filters 70
600 Series 0.7 Micron Coarse Grade Coalescing Filters 72
600 Series 0.3 Micron Fine Grade Coalescing Filters 74
600 Series Micron Ultra Fine Grade Coalescing Filters 76
600 Series Adsorbing Grade Filters 78

Precision Pneumatic Controls **81**
80/82 Series Precision Regulators 82
83 Series Electropneumatic Transducers (I/P,E/P) 84
85 Series Miniature Electropneumatic Transducers (I/P,E/P) 86
87 Series Ratio Relay Volume Boosters 88
88 Series High Flow Precision Regulators 90
89 Series Instrument Air Regulators 92

Lockout Valve Series **95**
VL30/VL40 Series Manual Lockout Valves 96
VT30/VT40 Series Slo-Start™ Valves 97
VL52/VT52 Series High Flow Lockout Valves 98
MVL30/MVT30 Series Modular Lockout Valves 99
Modular Air Systems 100

FRL Options & Accessories **101**
L1/L2 Series Valve Adapters 102
Air System Analyzers 102
Pressure Switches 103
Digital Pressure Sensor/Digital Vacuum Sensor 104
Drain Options (Automatic Float, Flexible, External Pulse, Metal Manual, Manual Lever) 106
14-to-22 Series Quick Exhaust Adapter 107
Speed Control Mufflers (Bronze, Polyethylene) 108
Breather Vents 108
Inlet Filter Strainers 108
Reclassifiers 109
Bowl Options (CircleVision™, Metal Bowl, 64 oz. Lubricator Bowl) 110
Air Silencers (Metal Air, Porous Bronze, Polyethylene) 111
Differential Indicators (Delta Pressure, Diff. Pressure, Pop-Up Diff.) 112
Electronic Drain Valves 113
Tank Drain Traps 113
Mounting Brackets 114
Lubricator Button Head Fill 114
Gauges 115
Lockout Locks (Standard Lock, Scissor 'Trade' Lock) 115
UltraDry™ Membrane Dryers 116
Inline Disposable Filters 118

FRL Service Kits **119**
Warranty information **128**

The FlexiBlok® advantage

While many other FRL combinations rely on couplings, spacers, adapters, and/or sealant to connect components together - which is not only costly, but lowers structural integrity and is more difficult to assemble - each modular **FlexiBlok**® component connects directly using just one o-ring seal and 2 button head screws - eliminating leakage, keeping flow integrity intact, and lowering cost since there are no extra brackets, tools, or other devices necessary.

The **FlexiBlok**® line is designed to be simple and economical...

- Service can be performed while the component is installed in the air line.
- 22 and 32 Series bowls feature a unique locking tab bowl. Just pull the locking tab down, turn the bowl 45º, and pull down to remove.
- The unique design of the 22 & 32 series bowls allows the o-ring to be held captive on the bowl, making it easy to check and replace if necessary.
- Delta pressure indicators are standard on all 22 and 32 Series coalescers.
- Particulate filters feature a *standard* 5 micron element.
- Coalescing filters feature dual support cores which prevent rupture and collapse.
- CircleVision™ bowls allow the machine operator or manager a clear visual indication of the liquid level in a filter or lubricator bowl from up to 40 feet away.
- *Every* product is tested and approved for quality assurance.

Customize your FlexiBlok® components

The 22 and 32 Series **FlexiBlok**® components include a black template which can be customized by having your name and/or logo placed on it. This adds personalization to **FlexiBlok**® filters, regulators, piggybacks, lubricators, and solenoid soft start valves - ideal for OEM applications. Please contact your local distributor for information on custom templates.

Keeping customers informed of new products

Don't be left in the dark when it comes to new products. At Numatics, we offer plenty of literature for our products, including New Product Bulletins which are released for every new product and sent to our distributors and included on our website for download. They give detailed information about application, benefits, features, options, and how to order - as well as provide informative drawings, photos, and flow charts where applicable.

The FlexiBlok® advantage

Made with lightweight but sturdy aluminum castings, the **FlexiBlok®** FRL Series offers the most reliable performance and durability of any FRL line. Most components can be modified with available options and accessories (see page 89) like metal bowls and easy-to-operate drains. Also, **FlexiBlok®** components are in stock and ready for order through the Rapid Response Program (contact your Numatics distributor for more information).

Let us show you how our **FlexiBlok®** products work and what they are capable of. In addition to the product descriptions below, please see the **FlexiBlok®** section of this catalog on page 13 for detailed flow graphs, specs, and application notes.

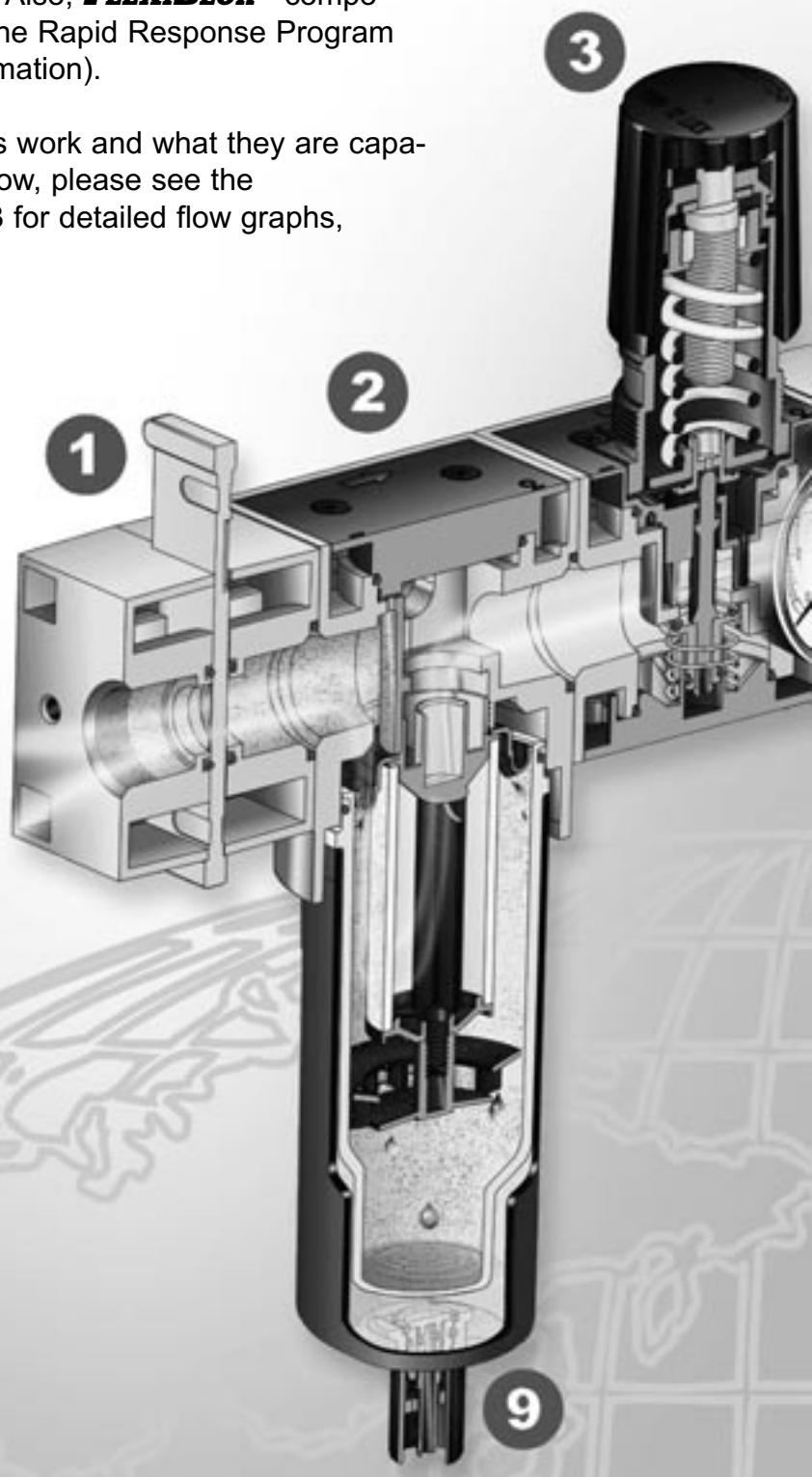

1 *Shutoff Valve*

Manual shutoff used to relieve downstream pressure for servicing or maintenance. Security hole provided for lockout capabilities. May also be used as a stand-alone unit.

2 *Filter*

Particulate Filter: 5 micron filtration (shown) used as a primary filter to remove water, dust, and debris from air line. Water removal efficiency at 90% or better at rated flow.
Coalescing Filter: used as a secondary filter to remove up to 99.99% of oil and particles. Available with four different type elements - .1, .3, and .7 micron filtration and a vapor adsorbing element that utilizes activated carbon to deodorize compressed air.

3 *Regulator*

Reduces supply pressure to a required working pressure. Available in relieving or non-relieving styles and in four different pressure ratings.

4 *Diverter Block*

Provides total versatility; mounts directly inline to allow additional components to be manifolded without excessive pressure drop.

5 *Lubricator*

Designed to meter oil aerosols into the air stream where lubrication is required. Tamper-resistant adjustment knob eliminates unauthorized adjustments.

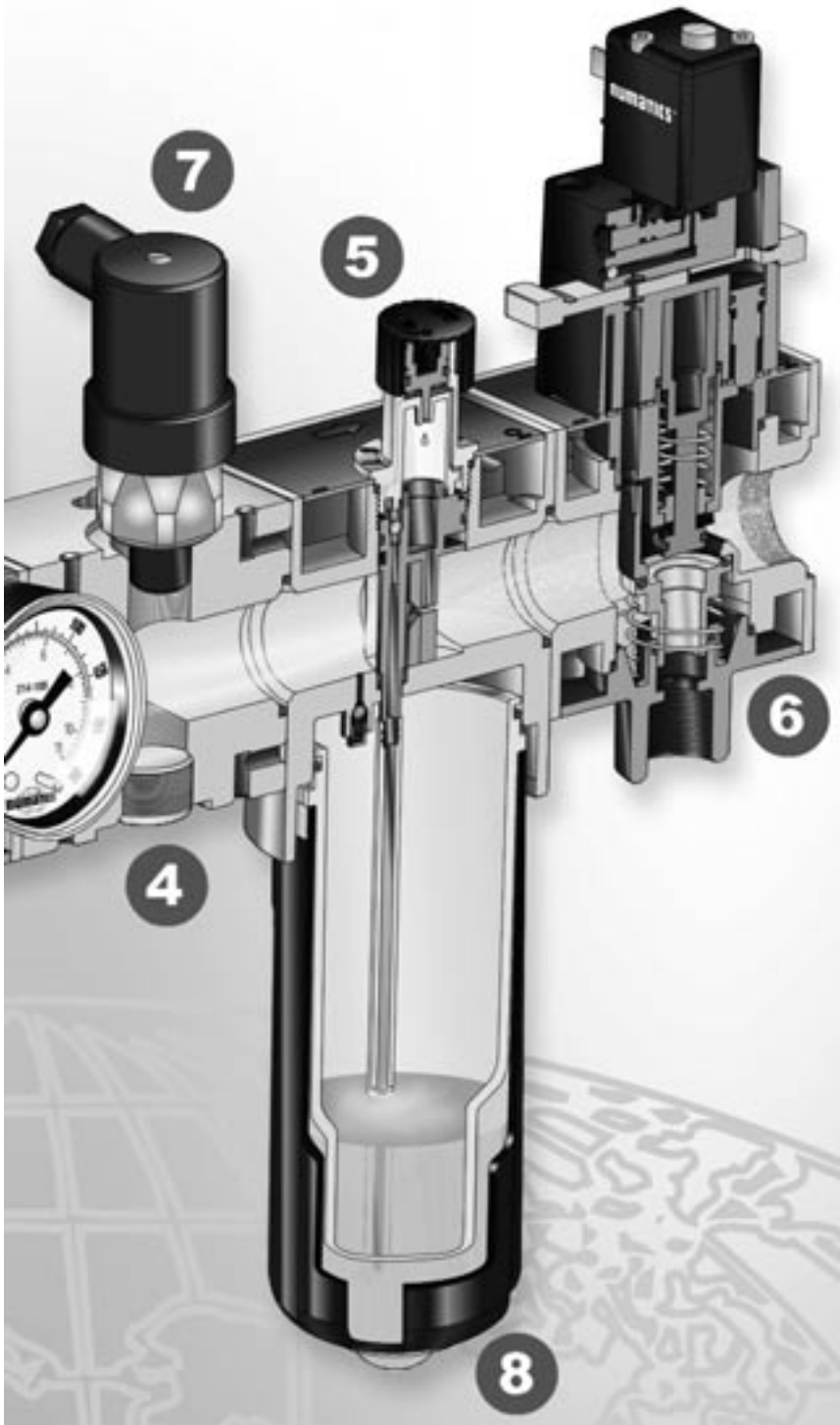

6 Solenoid Soft Start Quick Exhaust Valve

When solenoid air pilot is energized, adjustable flow control allows system to be pressurized slowly. When downstream pressure reaches approximately 60% of upstream pressure, slow start shifts to full flow condition. When solenoid air pilot is de-energized, downstream pressure exhausts to atmosphere. Equipped with manual override and lockout.

7 Pressure Switch

Allows for remote monitoring of system pressure. An adjustable, tamper-resistant knob resists unauthorized changes.

8 Bowls

Three types available: polycarbonate bowl with guard (standard), metal bowl with sight glass, and CircleVision™ - a metal bowl wrapped in polycarbonate, allowing a 360º view of liquid level in bowl.

9 Drains

Five types available: Manual drain with internal barb fitting for drain tube (standard), automatic float drain, flexible drain, external pulse drain, metal manual drain, and manual lever drain. All feature unique characteristics suitable for many different applications.

High Flow

The Numatics FRL FlexiBlok® line is designed for high flows - with minimal pressure drop.

Product Connection

Each FlexiBlok® component is engineered to connect directly to the next without inserts or special tools, ensuring optimum stability and strength.

Integral Mounting Holes

FlexiBlok® components mount directly without the use of special brackets or inserts, allowing for individual component mounting for stand-alone units.

The Numatics filtration advantage

Numatics coalescing filters use a borosilicate glass fiber to remove contaminant from air lines. Air flows from the inside to the outside of the element through progressively larger openings in the media, trapping contaminant particles and forcing liquids to form into larger drops and drain to the bottom of the bowl. Numatics filters are used to remove hydrocarbon, oil, and more. The filters are made up of seven main features:

1 End Seals

Urethane end seals provide positive seal. Compatible with mineral base and synthetic lubricants

2 Optional Pleated Prefilter

3 micron media protects the fine borosilicate fibers, extending the life of the coalescing media

3 Inner Media Wrap

Allows crossflow of gas which initiates the coalescing process

4 Media

Six media choices for best performance (see page 57). Proprietary glass fiber blend combines low differential pressures and high efficiencies with maximum holding capacity

5 Outer Media Wrap

Allows crossflow of gas and improves performance

6 Drain Layer

Non-wicking fiber prevents reentrainment

7 Color-coded Webbing

Allows for easy identification of media type

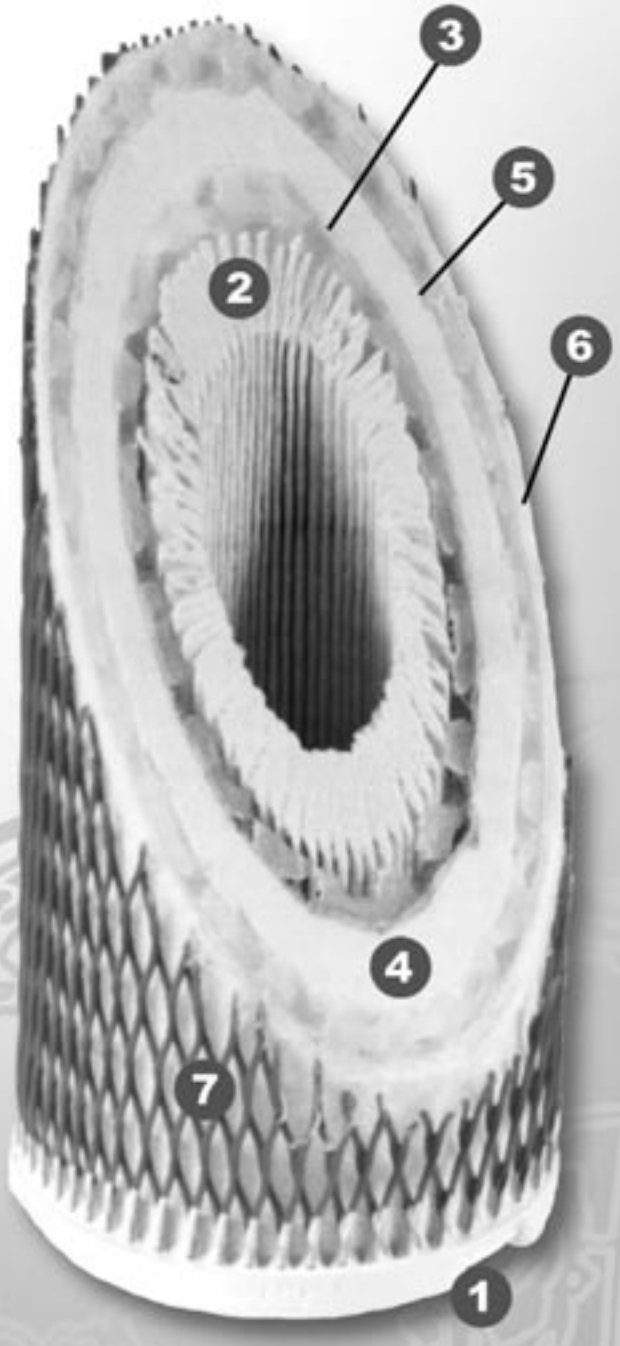

See page 7 for more information about our line of coalescing filters, including media grade information, application notes, and a helpful chart showing diameters of particles and aerosols in microns.

Air flows from the inside to the outside of the element through progressively larger openings in the media. As contamination moves through the element, solid particles are trapped and liquids are formed into large droplets. As the air exits the element, surface tension holds the liquids and allows them to drain to the bottom.

The MicroPath™ 0.3 micron borosilicate glass fiber element, when magnified 228x (left), shows deep, tortuous paths and large air pockets which provide high performance contaminate removal and longer life.

Scanning electron micrograph (at 228x)

Dirty filter magnification (at 40x)

Contamination removal from a typical compressed air line with 0.3 micron MicroPath™ media is shown magnified 40x (right). The contamination contains hydrocarbon (black), oil (opaque drops), and metal fragments (shiny spots).

With Numatics elements like the one on the left installed in your system, the contamination on the right won't get to where it can cause damage. Your system lasts longer and costs less.

What you get is not always what you see

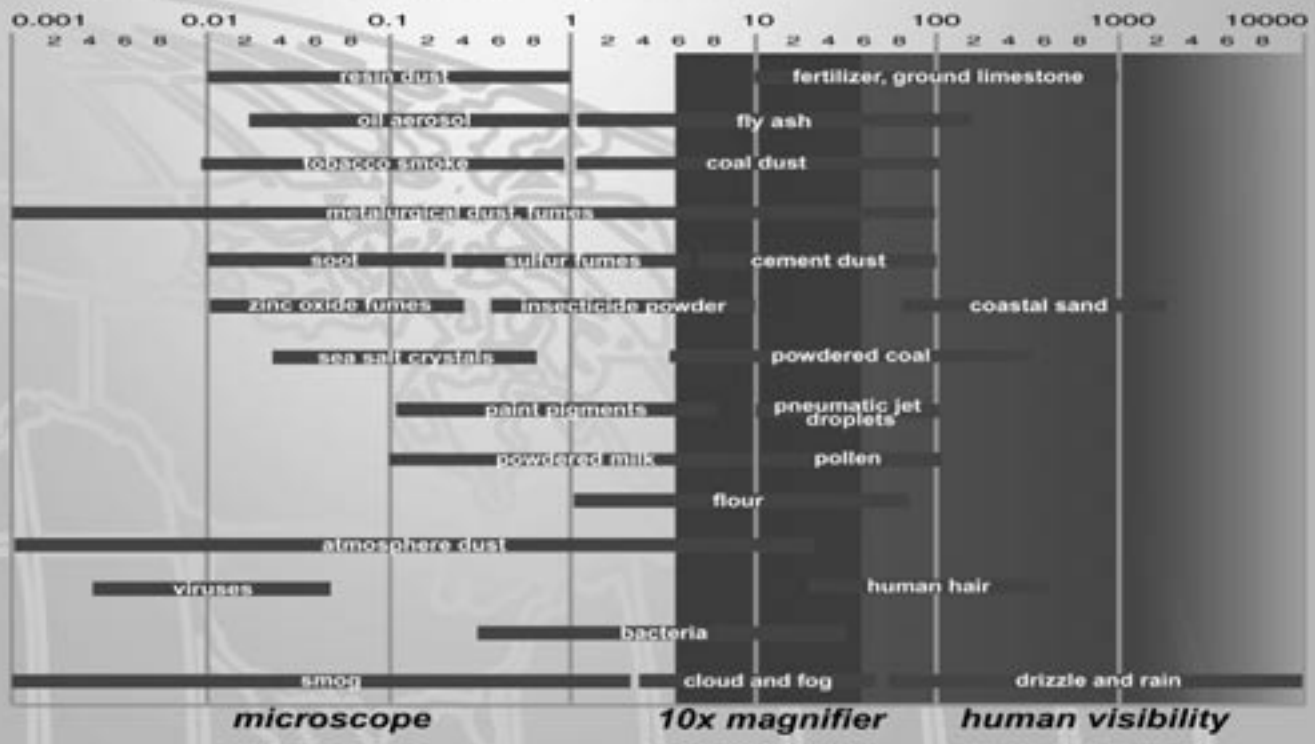

Endless manifold possibilities

The ***FlexiBlok*** ® 14 Series Manifold Regulator allows several regulators to be connected together in a line. Such a combination may be manifolded left to right ***or***, using a 14 Series Diverter Block, up and down, providing an option for any mounting scenario.

The Manifold Regulator allows flexibility with any necessary pressure. The common P1 port through each regulator makes it possible for the 2nd, 3rd, and any other following inline regulator to provide independent pressure. For example, when 100 PSI enters the first manifold regulator, that pressure will continue to be carried across all following regulators, giving each regulator in the line 100 PSI primary pressure. The reduced pressure is taken from the gauge ports; either front or back!

A system equipped with the Manifold Regulator can help reduce operation costs, since several applications can use pressure supplied by a single FRL assembly.

Numatics In-Fittings are the perfect solution for connecting tubing from a Maniforld Regulator to the application. For more information, contact the In-Fitting hotline at 1-877-NUMAFIT or see the 'In-Fittings' catalog (LTINFITTING).

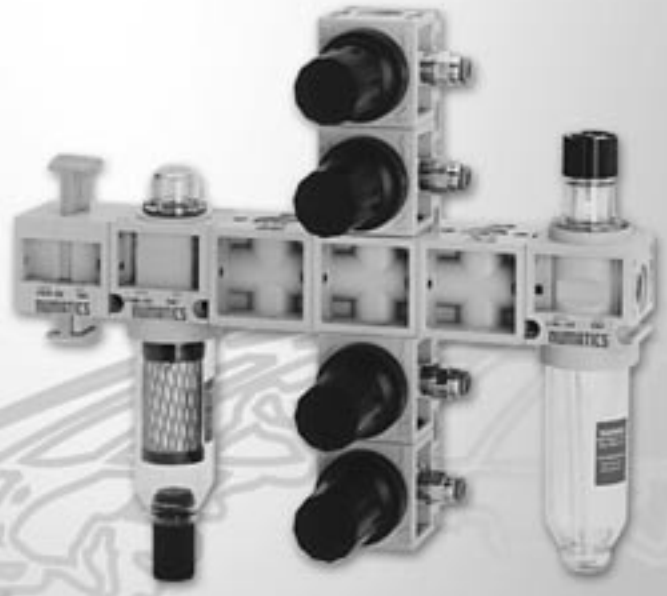

No room to build left to right? Have no fear -- regulators can be manifolded up to down using 14 Series Diverter Blocks.

Up to down not an option? Manifold regulators are flexible enough to be built in any direction ***(notice use of a standard regulator downstream of manifold regulators for reduced & stabilized pressure exiting the lubricator)****!*

FlexiBlok® ease of assembly

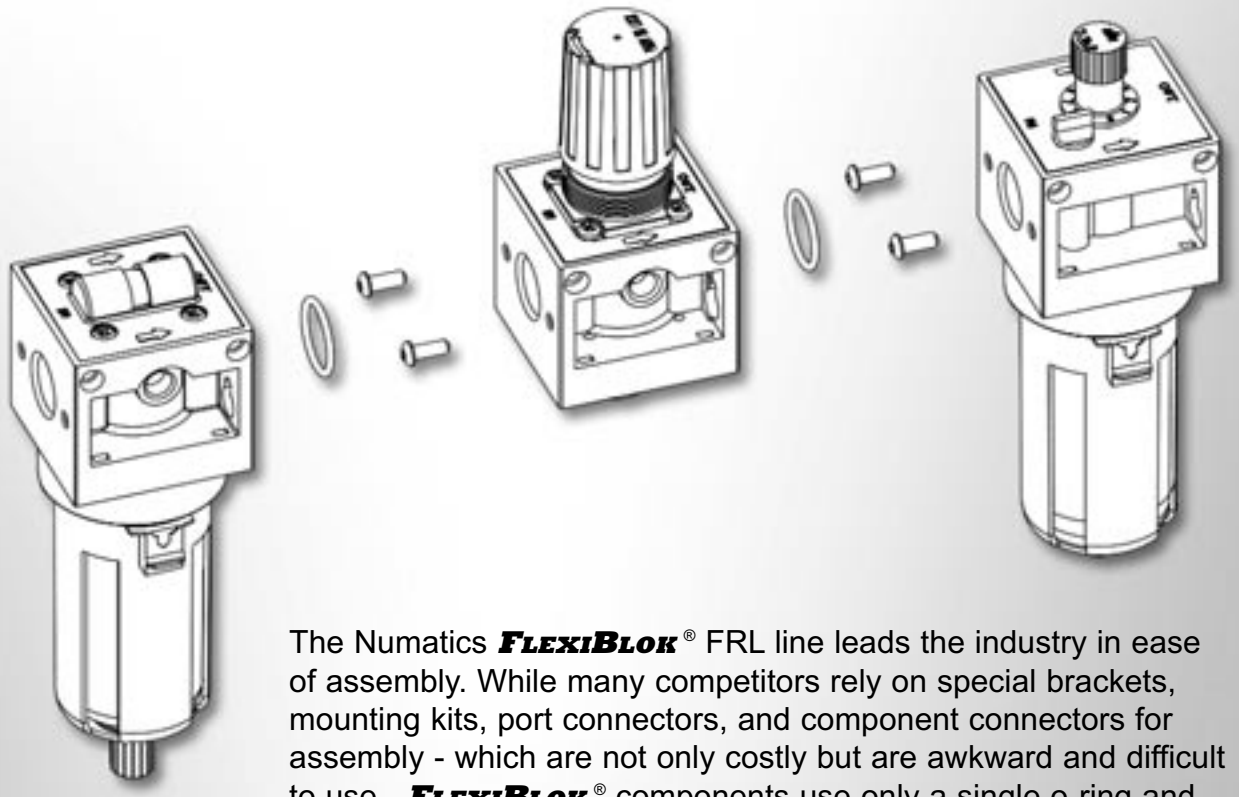

The Numatics ***FlexiBlok*** ® FRL line leads the industry in ease of assembly. While many competitors rely on special brackets, mounting kits, port connectors, and component connectors for assembly - which are not only costly but are awkward and difficult to use - ***FlexiBlok*** ® components use only a single o-ring and two screws to connect together. Integrated mounting holes eliminate the need for mounting brackets. The need for end plates is eliminated, as the in/out ports of all components are tapped so that any unit can be used as a stand alone unit.

By eliminating the need for additional special components, the Numatics ***FlexiBlok*** ® line keeps costs down and maintenance and assembly quick and easy.

Less is more with FlexiBlok®

The typical ***FlexiBlok*** ® FRL assembly (filter/regulator/lubricator) uses a total of 9 pieces to connect the three components. Some competitor assemblies require as many as 29 individual pieces. Most of these necessary parts are built into ***FlexiBlok*** ® components.

FlexiBlok® FRL assemblies use nearly 3 times fewer pieces!

Application and Installation

Numatics gained its worldwide reputation in the air valve industry with the invention of the multi-purpose precision lapped spool and sleeve assembly design. To compliment our valve line and air logic systems, Numatics began expanding its product line to include FRLs and numerous air preparation products in 1988. Today, Numatics leads the industry in air preparation equipment. Here's how Numatics can provide for all of your air preparation needs:

1 *Air Compressor*
Takes large volumes of atmosphere air (14.5 PSIA/1 bar at sea level) and compresses the air to a system pressure. Due to the large volume of air used, the concentration of contamination is greatly multiplied; the air is saturated with moisture, dirt, and hydrocarbons.

2 *Numatics Drain Valve*
Automatically expels water on timed sequence, eliminating the potential for water carryover.

3 *After Cooler*
Reduces system air temperature from 'hot' compressed air (200-400º F / 95-205º C) to a manageable temperature (approximately 100º F / 40º C). Uses either air or water heat exchanger to achieve low temperature.

4 *Water Separator*
Uses centrifugal action to 'spin' water out of the system. Removes large volumes of liquid water. Must have automatic drain.

5 *Receiver Tank*
Stores large volume of air to save compressor from constant start/stop sequence. Provides consistent supply pressure to all work stations.

6 *Air Header and Air Drop*
Should be installed in a closed loop around plant with a 1/4" per 10' slope to allow water to drain. Remove air from top of header to prevent moisture or contaminant from continuing toward application.

7 *Drip Leg*
Usually sized three times the diameter of the air drop. Collects moisture and contaminant.

8 *Numatics Regenerative Air Dryer*
Uses molecular sieve in twin containers to provide extremely low dew point. One container is always in the purge mode while the other is removing moisture. Air must be clean and oil free. Reduces pressure dew point to well below 32º F (0º C). For refrigerated applications or when compressed air will be used outside in cold climates. See Numatics regenerative air dryer catalog for further information.

9 *Numatics Refrigerated Dryer*
Uses refrigerated heat exchanger to condense water out of system. Will reduce pressure dew point to 36º F - 40º F (2.2º C - 4.4º C). Ambient temperature should not be below 45º F (7.2º C) or freezing may occur. See Numatics refrigerated dryer catalog for further information.

10 *Numatics Valves*
Performs equally well with or without lubrication. The lapped spool and sleeve valve is the most reliable valve for dirty or clean environments. For maximum performance, filtration is recommended.

11 *Numatics Cylinders*
Performs equally well with or without lubrication. New seal design eliminates packing cylinder bore with grease to achieve non-lube function.

12 *Numatics Coarse Grade Filter (0.7 micron; optional)*
Removes bulk amounts of oil aerosols through impingement separation. Should have automatic drain valve to allow collected moisture to escape. Pop-up indicator or ΔP pressure gauge should be used to determine the need for element change. Protects refrigerated dryer from coating of interior walls. Oil will act as an insulator and eventually reduce efficiency of dryer. Pleated prefilter should be installed for longer life.

13 *Numatics High Flow Particulate Filter (3.0 micron; optional)*
Prevents any molecular sieve dust from passing downstream. Collects in large surface area of exterior pleats.

14 *Numatics High Flow Fine Grade Coalescer (0.3 micron)*
This filter is the standard element model for removing suspended aerosols and fine dust. Prevents downstream components from being coated with an oil mist such as before a regenerative dryer (molecular sieve becomes inefficient when it comes in contact with oil) or critical gauging systems.

15 *Numatics High Flow Ultra Fine Coalescer (0.1 micron)*
Removes last trace aerosols. Designed for critical instrumentation or maximum purity applications.

16 *Numatics Lockout Valves*
Allows system air to be exhausted quickly for safety or other maintenance functions. Large locking hole for trade locked or other security device prevents system from being accidentally turned on during maintenance. Meets OSHA specifications.

17 *Electropneumatic Transducers*
I-P/E-P Pressure Transducer uses critical orifices and components that may be damaged by oils or carryovers incompatible with circuitry.

18 *Numatics FlexiBlok® Shut Off Valves*
Relieving model allows bleed down of downstream air for maintenance functions. Can be locked out for security. Meets OSHA specifications.

19 *Numatics FlexiBlok® Particulate Filters*
Designed to remove accumulated condensation and particles. Recommended standard filtration is 5 micron. Optional automatic drain dispels liquid from bowl.

20 *Numatics FlexiBlok® Regulator*
Reduces system pressure to working pressure saving both compressed air costs and pressure fluctuation. Since increasing pressure does not necessarily increase speed, the lowest pressure required to perform the task will be the least expensive. Ask us about Numasizing!

21 *Numatics FlexiBlok® Filter/Regulators ('Piggybacks')*
Combination filter/regulator performs the duties of both components in one compact unit.

22 *Numatics FlexiBlok® Diverter Block*
Allows air to be diverted into multiple directions. Can be used in manifold or direct piped applications.

23 *Numatics FlexiBlok® Lubricator*
Allows precise amount of lubricant to atomize and be sent downstream in aerosol form. Useful for air motor or very high-cycle actuator applications.

24 *Numatics FlexiBlok® Solenoid Soft Start Quick Exhaust*
Solenoid-activated soft start valve allows system to slowly bleed up to working pressure, preventing rapid acceleration from damaging components. Downstream pressure quickly exhausts when solenoid is de-energized.

25 *Reclassifiers*
Removes oil mist and reduces noise from exhaust ports on pneumatic valves, cylinders, and air control systems at extremely high flow rates

Compressor with Refrigerated Drying System

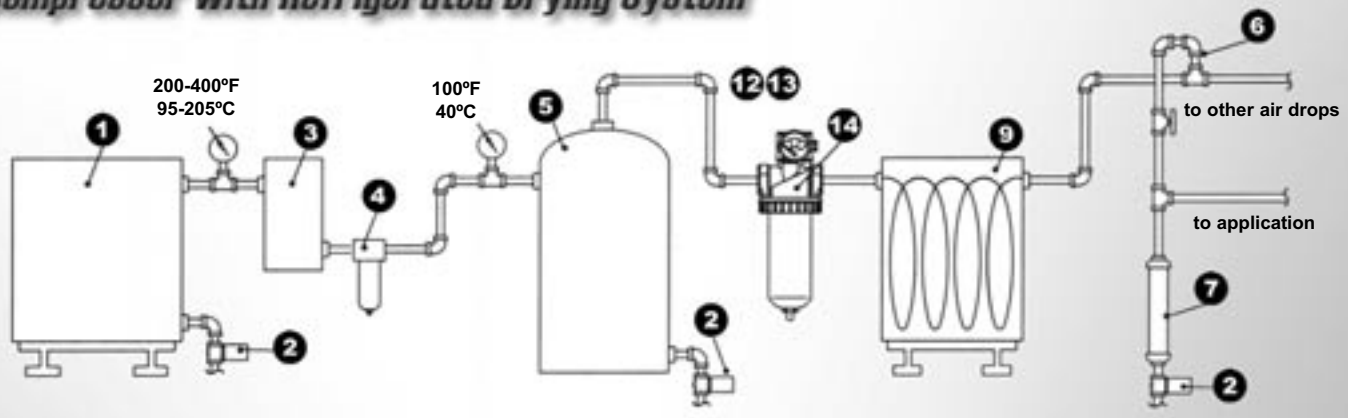

Compressor with Regenerative Drying System

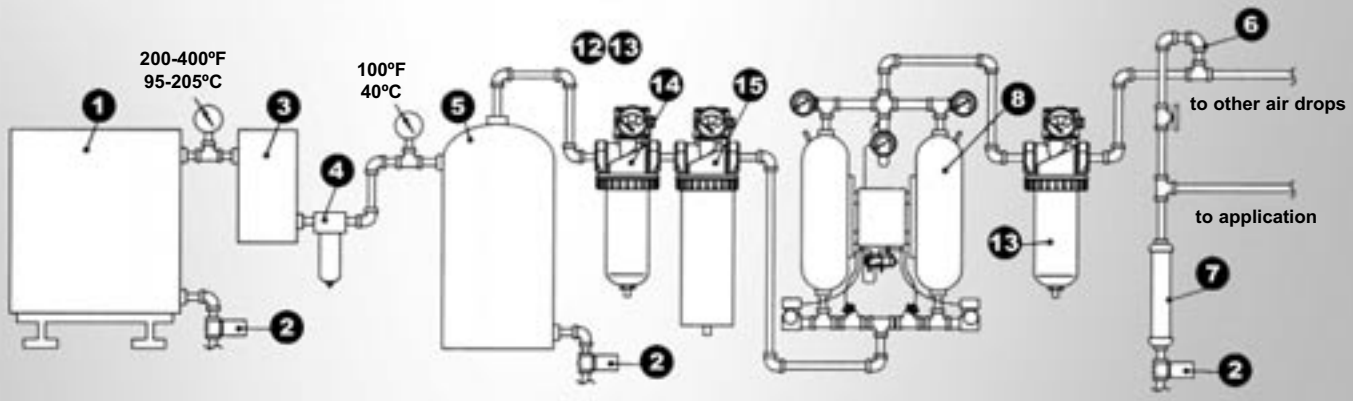

Instrument Circuit

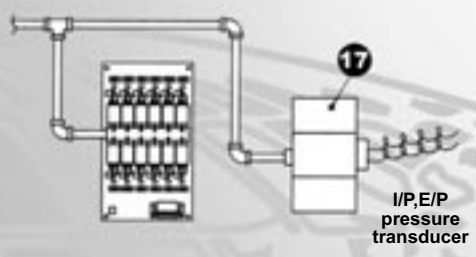

Modular Air Preparation System

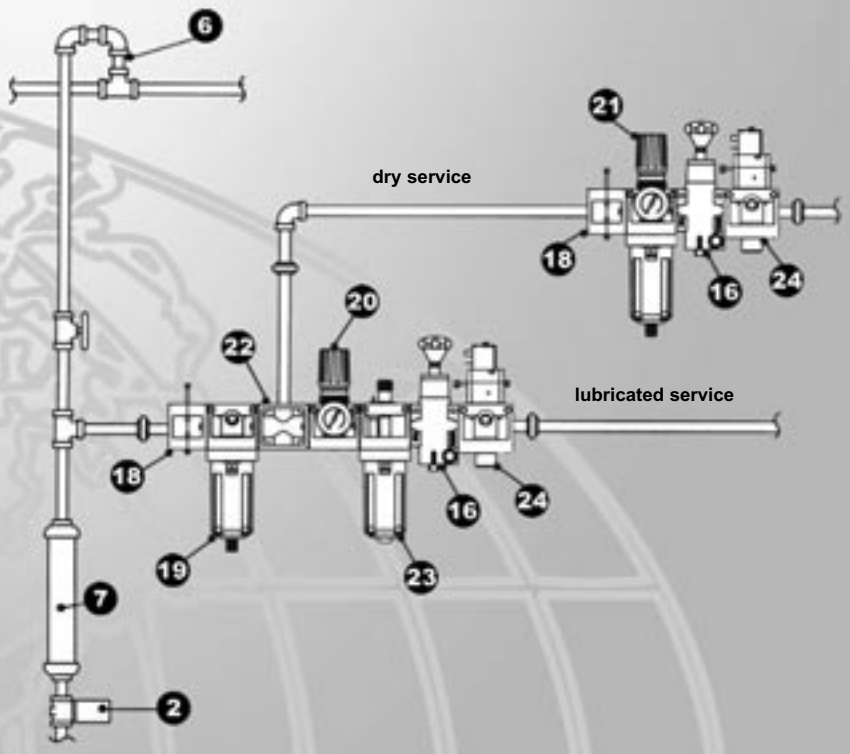

Lubricated Cylinder Circuit

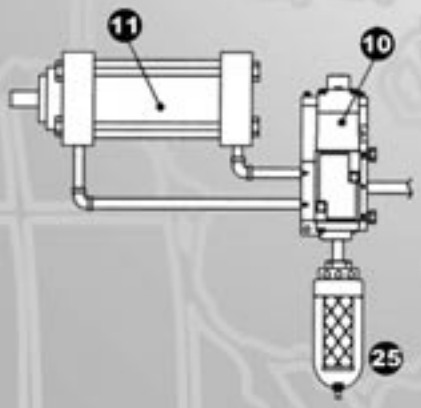

Guide to using this catalog

This product catalog was created using feedback from our customers, making it comprehensive, accurate, and easy to use. The standardized layout makes finding information fast and easy. Each product page incudes information such as...

1 Product photos

Every product is represented by a photograph, making identification quick and simple. The photos are sized to show essential details.

2 Detailed dimensional drawings

The dimensional drawings shown with each product include both U.S and metric measurements (shown below U.S. measurements and/or in parenthesis).

3 Easy-to-read flow graphs

The flow graphs are also shown with both U.S. and metric scales, making them easy to read and use in any application.

4 Application, features, & specifications

Essential in understanding the product, application notes and product features, as well as technical specifications, are included in each section.

5 Cross-section drawings

The product photos show what the product looks like on the outside, but the cross-section drawings show the working parts of each product, with each part clearly marked for identification, making it easy to understand how the product works.

6 ANSI symbology

ANSI symbols are included where applicable.

7 Maintenance notes

Maintenance instructions for cleaning, repairing, and servicing components are clear and simple; follow the steps to easily disassemble each unit for service and reassemble without any hassle.

8 Ordering information

Our ordering information is easy to read and understand. Part numbers are shown in black, and components which represent and option or other variable feature are encircled in gray. Each component of the part number is marked for easy understanding.

ORDER ONLINE

numatics

FRL Products and Accessories

FlexiBlok® FRL Series

StockBlok® & ModuBlok™ Combinations 14
14/22/32 Series Particulate Filters 20
14/22/32 Series Coalescing Filters 22
14/22/32 Series Regulators 24
14 Series Manifold Regulators 26
22/32 Series Pilot Operated Regulators 28
14/22/32 Series Particulate Filter/Regulators 30
14/22/32 Series Coalescing Filter/Regulators 32
14/22/32 Series Lubricators 34
22/32 Series Solenoid Soft Start Quick Exhaust Valves 36
22/32 Series Solenoid Quick Exhaust Valves 38
14/22/32 Series Shut-Off Valves 40
14/22/32 Series Diverter Blocks 40
22/32 Series Diverter Plates 41
32 Series Rear-Ported End Plates 41

ORDER ONLINE

Numatics **FlexiBlok**® FRL Series

StockBlok®

FRLs in standard combinations

StockBlok® assemblies utilize one model number for standard configurations, complete with gauges. Each component is factory assembled and tested.

Each of the standard **StockBlok**® combinations is a complete assembly. Bowl, drain, and fill options are available where applicable. Additional options are not available and, if required, components can be ordered as a **ModuBlok**™ combination (see page 19).

To order any of the **StockBlok**® models without the Shut-Off Valve, replace the "V" in the part number with an "X" (i.e. M22-03XFCXX).

See individual component pages for specifications and dimensions.

Shut Off/Particulate Filter/Regulator/Lubricator w/ Gauge

Components

Model #	Shut Off	Particulate Filter	Regulator	Lubricator	Weight lbs.	Weight kgs
M14-01VFRLX	VS14-01	F14B-01	R14R-01G	L14L-01	2.55	1.17
M14-02VFRLX	VS14-02	F14B-02	R14R-02G	L14L-02	2.55	1.17
M22-02VFRLX	VS22-02	F22B-02	R22R-02G	L22L-02	2.38	1.08
M22-03VFRLX	VS22-03	F22B-03	R22R-03G	L22L-03	2.38	1.08
M22-04VFRLX	VS22-04	F22B-04	R22R-04G	L22L-04	2.38	1.08
M32-04VFRLX	VS32-04	F32B-04	R32R-04G	L32L-04	4.78	2.17
M32-06VFRLX	VS32-06	F32B-06	R32R-06G	L32L-06	4.78	2.17

Options (see pg. 91)

A = Auto Drain (22,32 Series only)
B = Flexible Drain
C = CircleVision™ Sight Bowl (22,32 Series only)
J = External Pulse Drain
M = Metal Bowls w/ Sight Glass
F = Lubricator Quick Fill
Q = Metal Manual Drain
R = Manual Lever Drain

14 Series

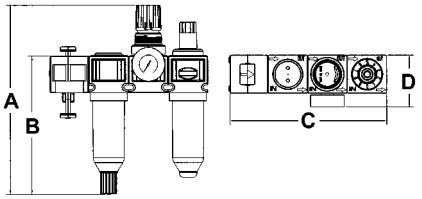

A 7.90 (200) **B** 5.84 (148) **C** 6.72 (172) **D** 3.1 (74)

22 Series

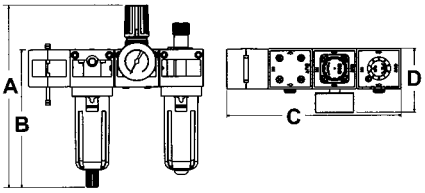

A 10.02 (255) **B** 7.62 (194) **C** 9.32 (237) **D** 3.42 (87)

32 Series

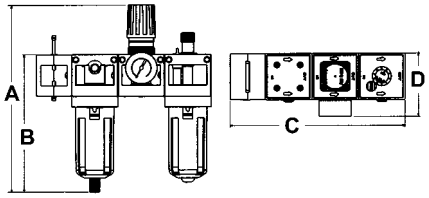

A 12.32 (313) **B** 9.12 (232) **C** 11.25 (286) **D** 4.10 (104)

Shut Off/Filter-Regulator/Diverter Block/Lubricator w/ Gauge

Components

Model #	Shut Off	Filter/ Regulator	Diverter Block	Lubricator	Weight lbs.	Weight kgs
M14-01VPDLX	VS14-01	P14B-01G	DK14-02	L14L-01	2.50	1.13
M14-02VPDLX	VS14-02	P14B-02G	DK14-02	L14L-02	2.50	1.13
M22-02VPDLX	VS22-02	P22B-02G	DK22-03	L22L-02	2.26	1.03
M22-03VPDLX	VS22-03	P22B-03G	DK22-03	L22L-03	2.26	1.03
M22-04VPDLX	VS22-04	P22B-04G	DK22-03	L22L-04	2.26	1.03
M32-04VPDLX	VS32-04	P32B-04G	DK32-04	L32L-04	4.86	2.21
M32-06VPDLX	VS32-06	P32B-06G	DK32-04	L32L-06	4.86	2.21

Options (see pg. 91)

A = Auto Drain (22,32 Series only)
B = Flexible Drain
C = CircleVision™ Sight Bowl (22,32 Series only)
J = External Pulse Drain
M = Metal Bowls w/ Sight Glass
F = Lubricator Quick Fill
Q = Metal Manual Drain
R = Manual Lever Drain

14 Series

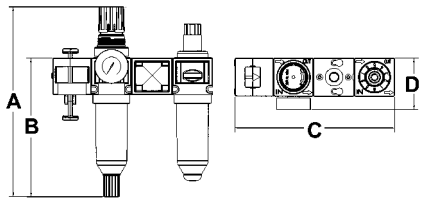

A 7.90 (200) **B** 5.84 (148) **C** 6.72 (172) **D** 3.1 (79)

22 Series

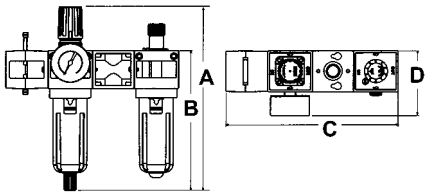

A 9.93 (252) **B** 7.62 (194) **C** 9.11 (231) **D** 3.41 (87)

32 Series

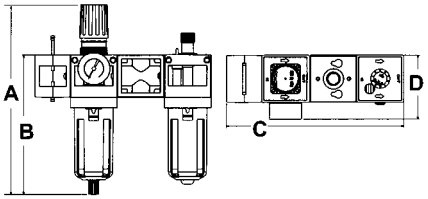

A 12.22 (310) **B** 9.12 (232) **C** 8.25 (210) **D** 4.10 (104)

Shut Off/Particulate Filter/Coalescing Filter/Regulator w/ Gauge

Components

Model #	Shut Off	Particulate Filter	Coalescing Filter	Regulator	Weight lbs.	Weight kgs
M14-01VFFRX	VS14-01	F14B-01	F14D-01	R14R-01G	2.60	1.20
M14-02VFFRX	VS14-02	F14B-02	F14D-02	R14R-02G	2.60	1.20
M22-02VFFRX	VS22-02	F22B-02	F22D-02	R22R-02G	2.38	1.08
M22-03VFFRX	VS22-03	F22B-03	F22D-03	R22R-03G	2.38	1.08
M22-04VFFRX	VS22-04	F22B-04	F22D-04	R22R-04G	2.38	1.08
M32-04VFFRX	VS32-04	F32B-04	F32D-04	R32R-04G	4.90	2.23
M32-06VFFRX	VS32-06	F32B-06	F32D-06	R32R-06G	4.90	2.23

Options (see pg. 91)

A = Auto Drain (22,32 Series only)
B = Flexible Drain
C = CircleVision™ Sight Bowl (22,32 Series only)
J = External Pulse Drain
M = Metal Bowls w/ Sight Glass
Q = Metal Manual Drain
R = Manual Lever Drain

14 Series

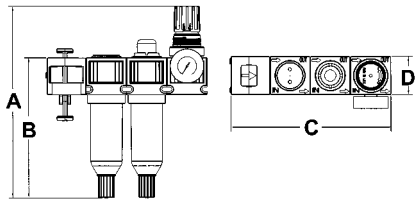

A 7.90 (200) **B** 5.84 (148) **C** 6.72 (172) **D** 3.1 (79)

22 Series

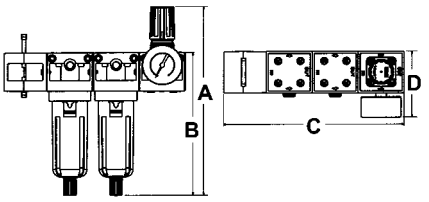

A 10.02 (255) **B** 7.62 (194) **C** 9.30 (237) **D** 3.42 (87)

32 Series

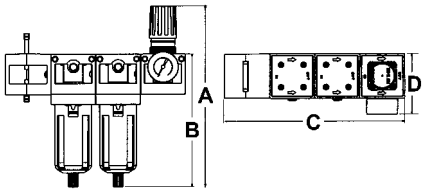

A 12.32 (313) **B** 9.12 (232) **C** 11.25 (286) **D** 4.10 (104)

Shut Off/Coalescer-Regulator/Lubricator w/ Gauge

Components

Model #	Shut Off	Coalescer/ Regulator	Lubricator	Weight lbs.	kgs
M14-01VCLXX	VS14-01	C14D-01G	L14L-01	2.10	0.94
M14-02VCLXX	VS14-02	C14D-02G	L14L-02	2.10	0.94
M22-02VCLXX	VS22-02	C22D-02G	L22L-02	1.96	0.89
M22-03VCLXX	VS22-03	C22D-03G	L22L-03	1.96	0.89
M22-04VCLXX	VS22-04	C22D-04G	L22L-04	1.96	0.89
M32-04VCLXX	VS32-04	C32D-04G	L32L-04	3.93	1.79
M32-06VCLXX	VS32-06	C32D-06G	L32L-06	3.93	1.79

Options (see pg. 91)

A = Auto Drain (22,32 Series only)
B = Flexible Drain
C = CircleVision™ Sight Bowl (22,32 Series only)
M = Metal Bowls w/ Sight Glass
F = Lubricator Quick Fill
Q = Metal Manual Drain
R = Manual Lever Drain

14 Series

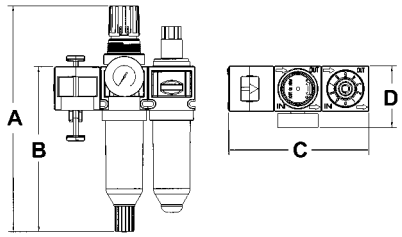

A 7.90 (200) **B** 5.84 (148) **C** 5.04 (129) **D** 3.1 (79)

22 Series

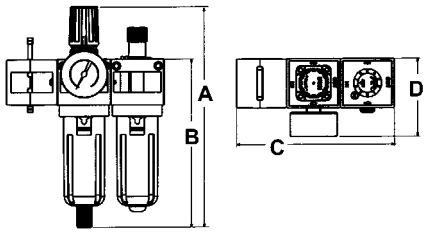

A 9.92 (252) **B** 7.62 (194) **C** 6.95 (177) **D** 3.42 (87)

32 Series

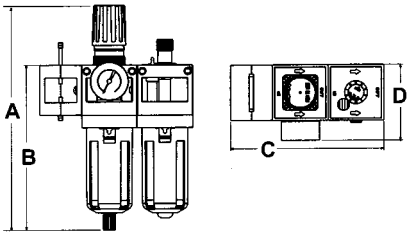

A 12.32 (313) **B** 9.12 (232) **C** 8.25 (210) **D** 4.10 (103)

Shut Off/Particulate Filter/Regulator/Diverter Block/Lubricator w/ Gauge

Components

Model #	Shut Off	Particulate Filter	Regulator	Diverter Block	Lubricator	Weight lbs.	kgs
M14-01VFRDL	VS14-01	F14B-01	R14R-01G	DK14-02	L14L-01	3.00	1.37
M14-02VFRDL	VS14-02	F14B-02	R14R-02G	DK14-02	L14L-02	3.00	1.37
M22-02VFRDL	VS22-02	F22B-02	R22R-02G	DK22-03	L22L-02	2.69	1.22
M22-03VFRDL	VS22-03	F22B-03	R22R-03G	DK22-03	L22L-03	2.69	1.22
M22-04VFRDL	VS22-04	F22B-04	R22R-04G	DK22-03	L22L-04	2.69	1.22
M32-04VFRDL	VS32-04	F32B-04	R32R-04G	DK32-04	L32L-04	5.72	2.60
M32-06VFRDL	VS32-06	F32B-06	R32R-06G	DK32-04	L32L-06	5.72	2.60

Options (see pg. 91)

A = Auto Drain (22,32 Series only)
B = Flexible Drain
C = CircleVision™ Sight Bowl (22,32 Series only)
J = External Pulse Drain
M = Metal Bowls w/ Sight Glass
F = Lubricator Quick Fill
Q = Metal Manual Drain
R = Manual Lever Drain

14 Series

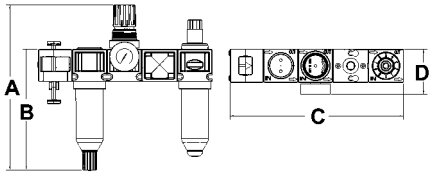

A 7.90 (200) **B** 5.84 (148) **C** 8.4 (215) **D** 3.1 (79)

22 Series

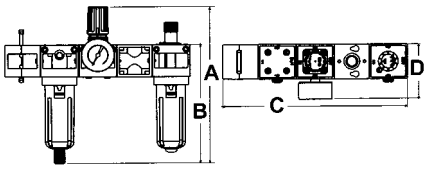

A 10.02 (255) **B** 7.61 (193) **C** 11.49 (292) **D** 3.42 (87)

32 Series

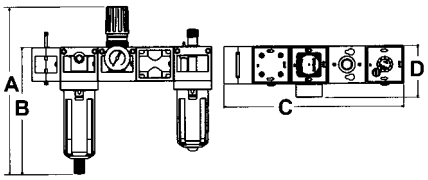

A 12.32 (313) **B** 9.12 (232) **C** 14.25 (362) **D** 4.10 (103)

Shut Off/Particulate Filter/Diverter Block/Coalescer-Regulator w/ Gauge

Components

Model #	Shut Off	Particulate Filter	Diverter Block	Coalescer/ Regulator	Weight lbs.	kgs
M14-01VFDCX	VS14-01	F14B-01	DK14-02	C14D-01G	2.55	1.15
M14-02VFDCX	VS14-02	F14B-02	DK14-02	C14D-02G	2.55	1.15
M22-02VFDCX	VS22-02	F22B-02	DK22-03	C22D-02G	2.26	1.03
M22-03VFDCX	VS22-03	F22B-03	DK22-03	C22D-03G	2.26	1.03
M22-04VFDCX	VS22-04	F22B-04	DK22-03	C22D-04G	2.26	1.03
M32-04VFDCX	VS32-04	F32B-04	DK32-04	C32D-04G	4.87	2.21
M32-06VFDCX	VS32-06	F32B-06	DK32-06	C32D-06G	4.87	2.21

Options (see pg. 91)

A = Auto Drain (22,32 Series only)
B = Flexible Drain
C = CircleVision™ Sight Bowl (22,32 Series only)
J = External Pulse Drain
M = Metal Bowls w/ Sight Glass
Q = Metal Manual Drain
R = Manual Lever Drain

14 Series

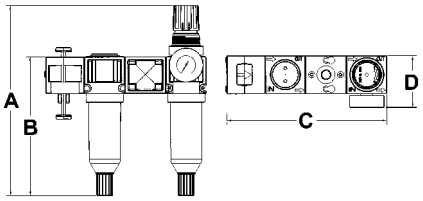

A 7.90 (200) **B** 5.84 (148) **C** 6.72 (172) **D** 3.1 (79)

22 Series

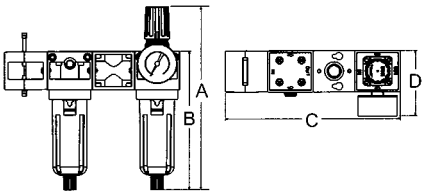

A 9.93 (252) **B** 7.61 (193) **C** 6.95 (177) **D** 3.42 (87)

32 Series

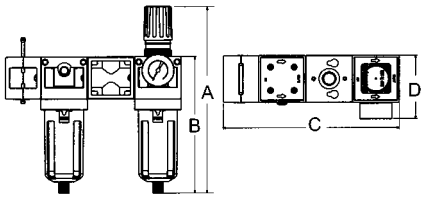

A 12.32 (313) **B** 9.12 (232) **C** 8.25 (210) **D** 4.10 (104)

Shut Off/Filter-Regulator/Lubricator w/ Gauge

Components

Model #	Shut Off	Particulate/ Regulator	Lubricator	Weight lbs.	kgs
M14-01VPLXX	VS14-01	P14B-01G	L14L-01	2.05	0.93
M14-02VPLXX	VS14-02	P14B-02G	L14L-02	2.05	0.93
M22-02VPLXX	VS22-02	P22B-02G	L22L-02	1.95	0.89
M22-03VPLXX	VS22-03	P22B-03G	L22L-03	1.95	0.89
M22-04VPLXX	VS22-04	P22B-04G	L22L-04	1.95	0.89
M32-04VPLXX	VS32-04	P32B-04G	L32L-04	3.92	1.78
M32-06VPLXX	VS32-06	P32B-06G	L32L-06	3.92	1.78

Options (see pg. 91)

A = Auto Drain (22,32 Series only)
B = Flexible Drain
C = CircleVision™ Sight Bowl (22,32 Series only)
J = External Pulse Drain
M = Metal Bowls w/ Sight Glass
F = Lubricator Quick Fill
Q = Metal Manual Drain
R = Manual Lever Drain

14 Series

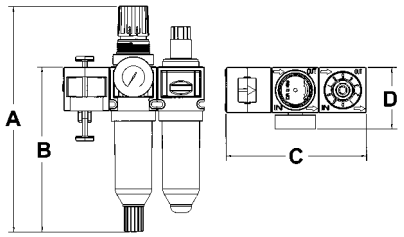

A 7.90 (200) **B** 5.84 (148) **C** 5.04 (129) **D** 3.1 (79)

22 Series

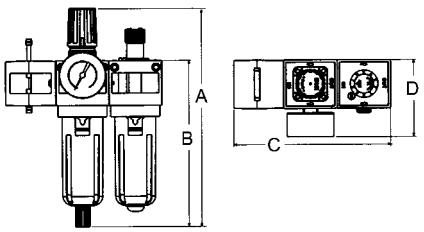

A 9.93 (252) **B** 7.61 (193) **C** 6.95 (177) **D** 3.42 (87)

32 Series

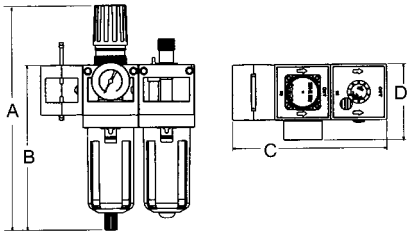

A 12.32 (313) **B** 9.12 (232) **C** 8.25 (210) **D** 4.10 (104)

Shut Off/Particulate Filter/Diverter Block/Regulator/Lubricator w/ Gauge

Components

Model #	Shut Off	Particulate Filter	Diverter Block	Regulator	Lubricator	Weight lbs.	Weight kgs
M14-01VFDRL	VS14-01	F14B-01	DK14-02	R14R-01G	L14L-01	3.00	1.37
M14-02VFDRL	VS14-02	F14B-02	DK14-02	R14R-02G	L14L-02	3.00	1.37
M22-02VFDRL	VS22-02	F22B-02	DK22-03	R22R-02G	L22L-02	2.69	1.22
M22-03VFDRL	VS22-03	F22B-03	DK22-03	R22R-03G	L22L-03	2.69	1.22
M22-04VFDRL	VS22-04	F22B-04	DK22-03	R22R-04G	L22L-04	2.69	1.22
M32-04VFDRL	VS32-04	F32B-04	DK32-04	R32R-04G	L32L-04	5.72	2.60
M32-06VFDRL	VS32-06	F32B-06	DK32-04	R32R-06G	L32L-06	5.72	2.60

Options (see pg. 91)

A = Auto Drain (22,32 Series only)
B = Flexible Drain
C = CircleVision™ Sight Bowl (22,32 Series only)
J = External Pulse Drain
M = Metal Bowls w/ Sight Glass
F = Lubricator Quick Fill
Q = Metal Manual Drain
R = Manual Lever Drain

14 Series

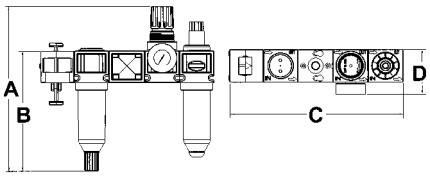

A 7.90 (200) **B** 5.84 (148) **C** 8.4 (215) **D** 3.1 (79)

22 Series

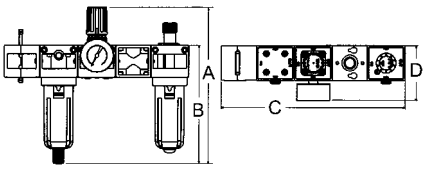

A 10.02 (255) **B** 7.62 (194) **C** 11.50 (292) **D** 3.42 (87)

32 Series

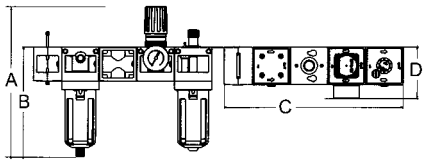

A 12.32 (313) **B** 9.12 (232) **C** 14.25 (362) **D** 4.10 (104)

Shut Off/Particulate Filter/Coalescer-Regulator w/ Gauge

Components

Model #	Shut Off	Particulate Filter	Coalescer/ Regulator	Weight lbs.	Weight kgs
M14-01VFCXX	VS14-01	F14B-01	C14D-01G	2.10	0.95
M14-02VFCXX	VS14-02	F14B-02	C14D-02G	2.10	0.95
M22-02VFCXX	VS22-02	F22B-02	C22D-02G	1.95	0.89
M22-03VFCXX	VS22-03	F22B-03	C22D-03G	1.95	0.89
M22-04VFCXX	VS22-04	F22B-04	C22D-04G	1.95	0.89
M32-04VFCXX	VS32-04	F32B-04	C32D-04G	3.93	1.79
M32-06VFCXX	VS32-06	F32B-06	C32D-06G	3.93	1.79

Options (see pg. 91)

A = Auto Drain (22,32 Series only)
B = Flexible Drain
C = CircleVision™ Sight Bowl (22,32 Series only)
J = External Pulse Drain
M = Metal Bowls w/ Sight Glass
Q = Metal Manual Drain
R = Manual Lever Drain

14 Series

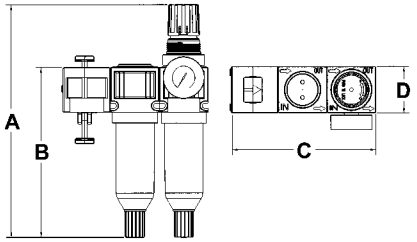

A 7.90 (200) **B** 5.84 (148) **C** 5.04 (129) **D** 3.1 (79)

22 Series

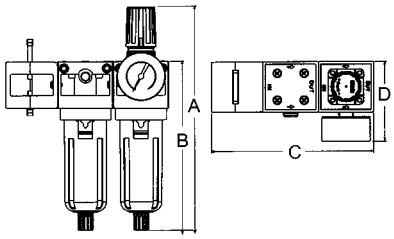

A 9.93 (252) **B** 7.61 (193) **C** 6.95 (177) **D** 3.42 (87)

32 Series

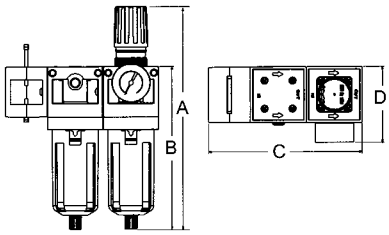

A 12.32 (313) **B** 9.12 (232) **C** 8.25 (210) **D** 4.06 (103)

ModuBlok™ Combination models

Example

MOD22-08

Station Position	Description	Model Number
1	Shut-Off Valve	VS22-03
2	Particulate Filter	F22B-03
3	Coalescer w/ metal bowl and pulse drain	F22D-03JM
4	Diverter Block	DK22-03
4T	Regulator	R22R-03
4B	Pressure Switch	PS180CAN02
5	Regulator w/ gauge	R22R-03G
6	Lubricator	L22L-03

About ModuBlock™ Assemblies

The FlexiBlok® modular system is designed to connect individual components into a complete assembly. Sometimes it is necessary to order an assembly using additional or non-standard components or combinations. The ModuBlok™ system makes it easy to order non-standard combinations.

As with all other components and combinations, all modular assemblies come factory tested and approved and assembled complete. For more information on flow, dimensions, options, and accessories, see individual component pages.

Because of the many possible combinations when utilizing modular systems, it is recommended that complex stations include a schematic drawing. When ordering, specify all components at each station, based on the example to the left.

How to label diverter blocks
When using a diverter block, indicate all units at that station before continuing. If additional units are mounted above the diverter block, use the letter ‘T’ (for ‘top’) as well as a letter sequence (TA, TB, TC, etc.) starting from the diverter block, and continuing out. If units are placed below the diverter block, begin the two letter alphabetic sequence with the letter ‘B’ (for bottom) as well as a letter sequence (BA, BB, BC, etc.) starting with the diverter block and continuing outward. Continue in this pattern until all units are placed correctly.

Reducing Bushings

Reducing bushings may be required to connect some components (i.e. pressure switches, etc).

Series	Size
22	3/8 to 1/4 *or* 3/8 to 1/8
32	1/2 to 1/4 *or* 1/2 to 1/8

NEED MORE PARTS AND INFORMATION?
- **See page 91 for more information on available options and accessories.**
- **See page 109 for information on ordering replacement parts and repair kits.**

Numatics **FLEXIBLOK**® FRL Series

PARTICULATE FILTER F14B, F22B, F32B Series

ANSI SYMBOL

F32B-06 pictured

Application

Primary air filters are designed to separate liquid, water, rust, pipe scale, and debris from air lines. They should be installed upstream of the regulator and/or lubricator to prevent contamination from reaching other components.

Water is removed mechanically by the deflector which causes the air to move in a swirling motion. The condensed water droplets are then centrifugally impounded upon the ID of the bowl then fall down past the quiet zone baffle to the water sump. The air then passes through the sintered element utilizing depth filtration and removes debris down to a 5 micron size.

Features

- Three convenient sizes
- 5 micron sintered elements standard
- Can be installed as modular or individual unit
- Includes screws and o-rings for modular connection
- Manual or automatic drain
- Polycarbonate bowl standard
- Optional metal bowl with sight glass
- Optional **CircleVision™** sight bowl
- Bowl seal held captive (22 and 32 Series)

Specifications

	Polycarbonate Bowl	CircleVision™ Bowl	Metal Bowl
Temperature Range (ºF)	40-120	40-120	40-120
Temperature Range (ºC)	4-50	4-50	4-50
Max. Pressure (PSIG)	150	250	200
Max. Pressure (BAR)	10	17	14
14 Series (Weight, lbs.)	.60	-	.65
14 Series (Weight, kg)	.28	-	.30
22 Series (Weight, lbs.)	.65	.86	1.25
22 Series (Weight, kg)	.30	.39	.57
32 Series (Weight, lbs.)	1.3	1.7	2.5
32 Series (Weight, kg)	.59	.77	1.14

How to Order

F 22 B - 04 AC

Model:
F = Filter

Series:
14 = 1.5 oz bowl
22 = 3.8 oz bowl
32 = 8.5 oz bowl

Element:
B = 5 micron element

Threads:
- = NPTF
G = G tap (BSPP)
R = PT (BSPT)

Port Size:
01 = 1/8 (14 series only)
02 = 1/4 (14 or 22 series only)
03 = 3/8 (22 series only)
04 = 1/2 (22 or 32 series only)
06 = 3/4 (32 series only)

Options (see pg 101):
A = auto drain (22 and 32 series)
B = flexible drain
C = CircleVision™ Sight Bowl (22 and 32 series)
J = external pulse drain
M = metal bowl with sight glass
Q = metal manual drain
R = manual lever drain
U = Δp indicator

NEED MORE PARTS AND INFORMATION?
- **See page 119 for information on ordering replacement filters, bowls, etc.**
- **See page 101 for more information on available options.**

ORDER ONLINE

Product Cross Section

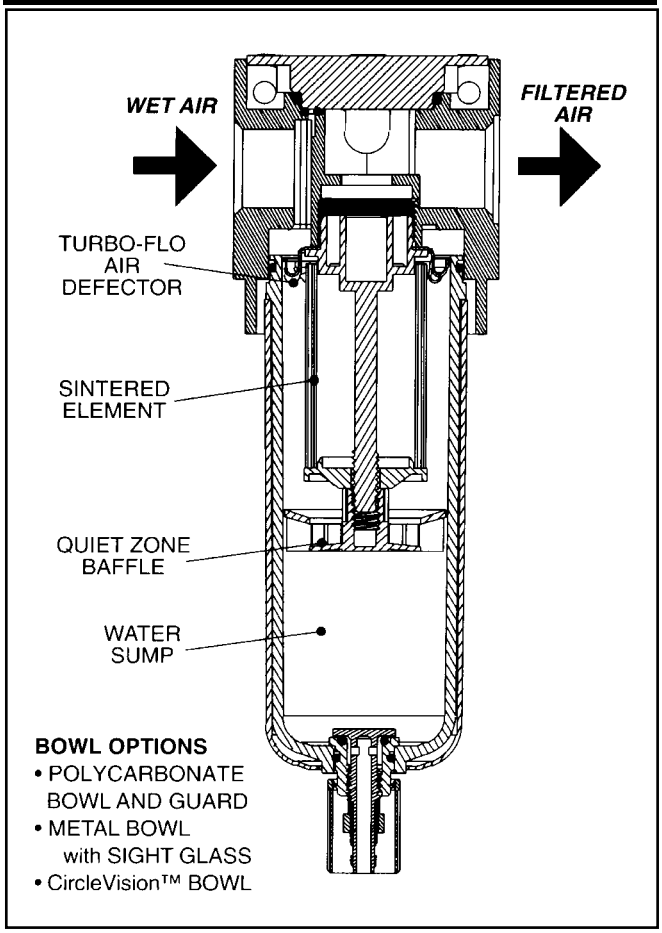

Dimensions

Dimensions in inches (millimeters in parenthesis)

14 Series Particulate

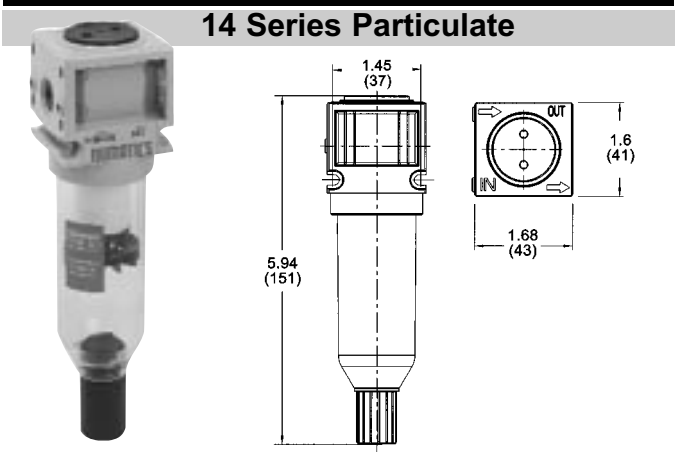

22 Series Particulate

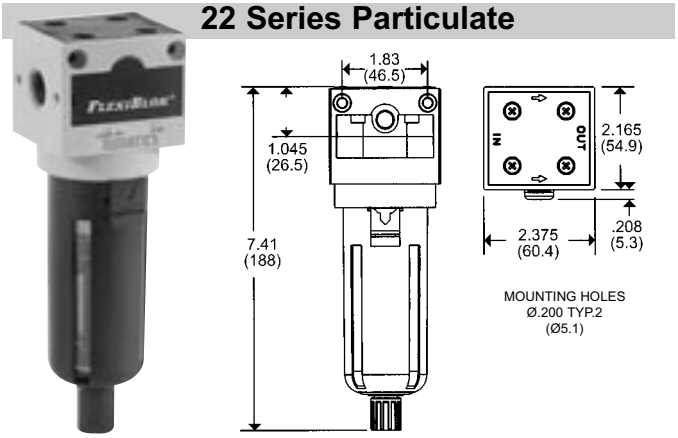

32 Series Particulate

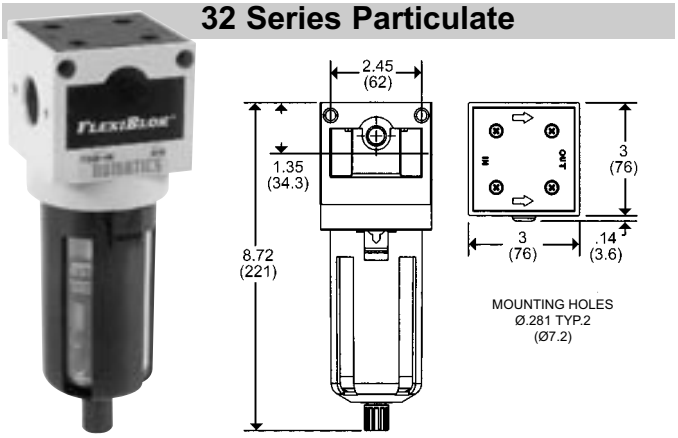

Notes

Maintenance Flush piping before installation. To maintain maximum efficiency of the filter and to avoid excessive pressure drop the filter must be kept clean. On standard filters, open the drain (turn counter-clockwise for standard drain models) periodically to expel contents of bowl before it reaches the level of the lower baffle.

Cleaning Removal from operation is not necessary to clean the filter. Disassembly is simple and can be performed inline. Before disassembling, shut off air supply and depressurize the filter. Clean all parts (except the filter element) with household soap and blow out filter body before reassembling.

Element Replacement Elements should be replaced after a pressure drop of 10 PSID has been reached or after 1 year, whichever occurs first.

Flow Rates

F14B-02 (5 micron particulate)

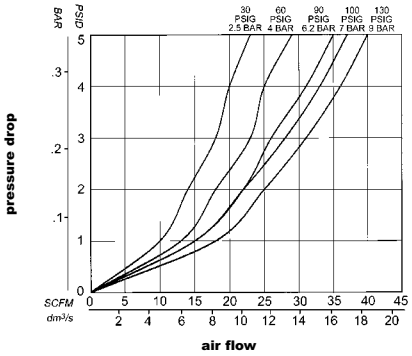

F22B-04 (5 micron particulate)

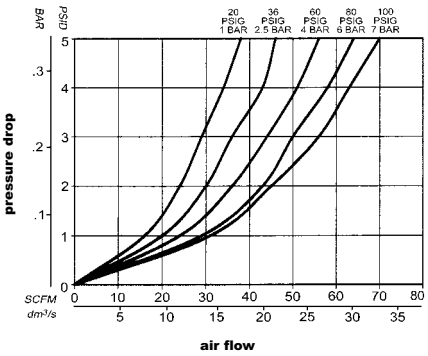

F32B-06 (5 micron particulate)

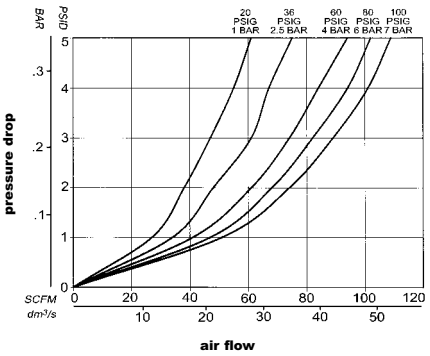

ORDER ONLINE

Numatics **FLEXIBLOK**® FRL Series

COALESCING FILTER F14, F22, F32 Series

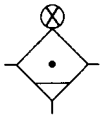

ANSI SYMBOL

F32D-06 pictured

Application

The coalescing filter is utilized when either clean air is required or longer component life is desired. This type of filter removes water and oil aerosols. It works differently than the particulate filter; dirty air enters the element from the center and passes through a field of glass fibers which cause the aerosols to form into droplets which are heavier than the surrounding air. The droplets grow larger as they pass through the element and gravity causes the oil drops to drain to the sump of the bowl. By removing the harmful oil varnishes and contaminant that attack seals and gaskets, the valve or cylinder is much less likely to stick. To maximize the life of a coalescing filter it should always be used after a 5 micron particulate filter or with the optional prefilter.

Features

- Three convenient sizes
- Cartridge element design
- Inner and outer support cores prevent element from crushing in either flow direction
- Available with manual or automatic drain
- Optional **CircleVision™** sight bowl
- Δp indicator standard on 14, 22, and 32 Series

Recommended Uses

C grade element, identified by its blue drain layer, is a coarse filter for large amounts of water, rust, pipe scale, and liquid hydrocarbons. Excellent for environments that have severe contamination. Can be used for lubricated or 'dry' systems. Ideal for mainline filtration of plant air.
D grade element, identified by its green drain layer, is a fine filter for cylinders or valves - especially when the circuit is being run without lubrication ('dry'). Excellent filter for desiccant or regenerative style dryers.
E grade element, identified by its red drain layer, is an ultra fine filter for oil-free instrumentation air, blow molding, food and drug packaging, electronics applications, and other applications requiring maximum contamination removal.
F grade element, identified by its white drain layer, is an adsorbing filter that utilizes activated carbon to capture hydrobarbon vapor and deodorize compressed air. Typically it is used to protect worker environments, food and drug applications, breathing air, and instrumentation for analytical instruments. Life expectancy is approximately 3 months at rated flow. Adsorbers must be preceded by a coalescer.

Prefilter Option - Suffix 'D'

Models using the C, D, or E grade elements can be equipped with an optional 3 micron internal prefilter. The prefilter provides additional protection for the fine borosilicate fibers. Ideal for the removal of high levels of solid contamination.

Specifications

	Polycarbonate Bowl	CircleVision™ Bowl	Metal Bowl
Temperature Range (ºF)	40-120	40-120	40-120
Temperature Range (ºC)	4-50	4-50	4-50
Max. Pressure (PSIG)	150	250	200
Max. Pressure (BAR)	10	17	14
14 Series (Weight, lbs.)	.65	-	.70
14 Series (Weight, kg)	.30	-	.32
22 Series (Weight, lbs.)	.66	.89	1.28
22 Series (Weight, kg)	.30	.40	.58
32 Series (Weight, lbs.)	1.42	1.83	2.56
32 Series (Weight, kg)	.65	.83	1.16

How to Order

F 14 D - 02 AC

Model:
F = Filter

Series:
14 = 1.5 oz bowl
22 = 3.8 oz bowl
32 = 8.5 oz bowl

Element:
C = .7 micron coarse coalescer
D = .3 micron fine coalescer
E = .1 micron ultra fine coalescer
F = vapor adsorber

Threads:
- = NPTF
G = G tap (BSPP)
R = PT (BSPT)

Port Size:
01 = 1/8 (14 series only)
02 = 1/4 (14 or 22 series only)
03 = 3/8 (22 series only)
04 = 1/2 (22 or 32 series only)
06 = 3/4 (32 series only)

Options (see pg 101):
A = auto drain (22 and 32 series)
B = flexible drain
C = CircleVision™ Sight Bowl (22 and 32 series)
D = 3 micron, internal pleated prefilter
J = external pulse drain
M = metal bowl with sight glass
Q = metal manual drain
R = manual lever drain

NEED MORE PARTS AND INFORMATION?
- **See page 119 for information on ordering replacement filters, bowls, etc.**
- **See page 101 for more information on available options.**

ORDER ONLINE

Product Cross Section

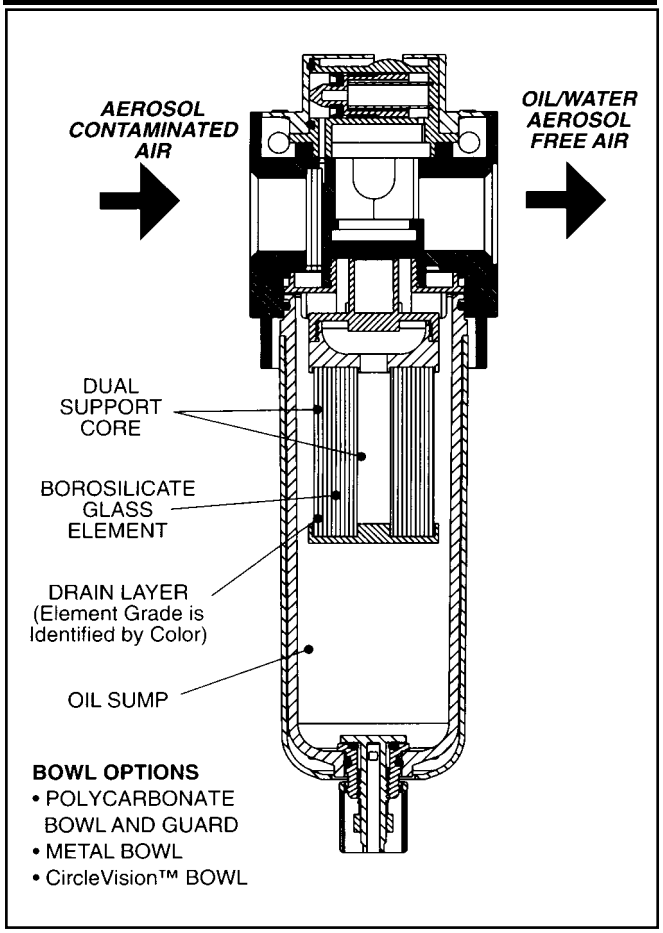

Dimensions

Dimensions in inches (millimeters in parenthesis)

14 Series Coalescer

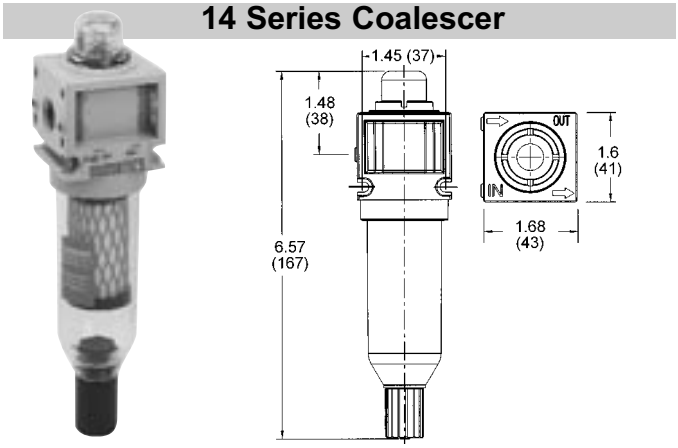

22 Series Coalescer

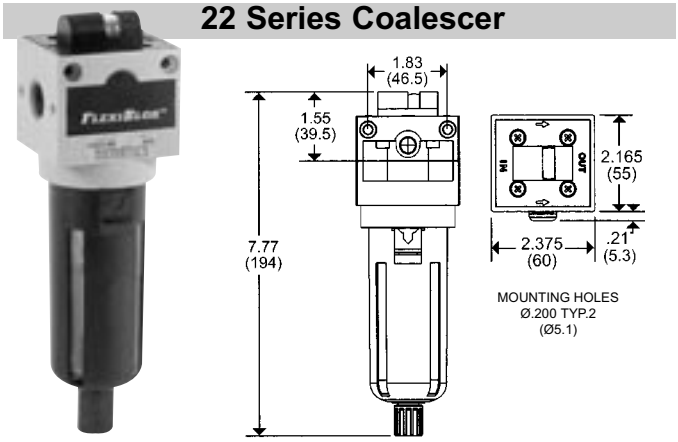

32 Series Coalescer

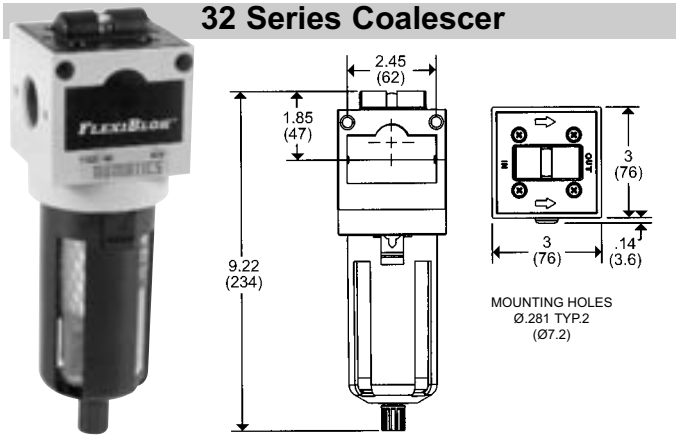

Notes

Maintenance Flush piping before installation. To maintain maximum efficiency of the filter and to avoid excessive pressure drop the filter must be kept clean. On standard filters, open the drain (turn counter-clockwise for standard drain models) periodically to expel contents of bowl before it reaches the bottom of the filter element.

Cleaning Removal from operation is not necessary to clean the filter. Disassembly is simple and can be performed inline. Before disassembling, shut off air supply and depressurize the filter. Clean all parts (except the filter element) with household soap and blow out filter body before reassembling.

Element Replacement Elements should be replaced after a pressure drop of 10 PSID has been reached or after 1 year, whichever occurs first (adsorbers should be replaced every 3-6 months).

Flow Rates

F14D-02 (.3 micron coalescer)

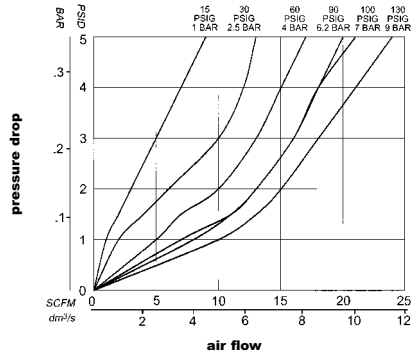

F22D-04 (.3 micron coalescer)

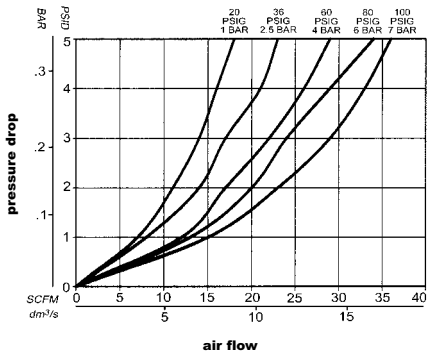

F32D-06 (.3 micron coalescer)

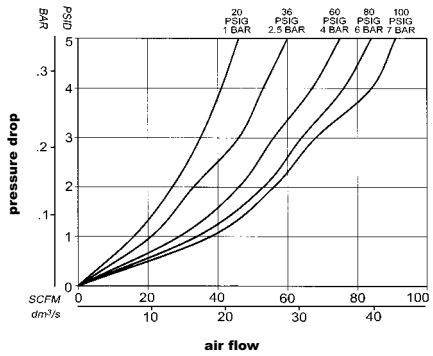

ORDER ONLINE

Numatics **FLEXIBLOK**® FRL Series

REGULATOR R14, R22, R32 Series

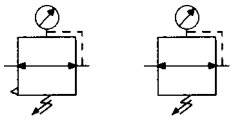

R32R-06 pictured

Application

Regulators are used to reduce pressure to a required working pressure. Utilizing optimum pressure can save companies both component life and a hundreds or even thousands of dollars in compressed air costs.

Regulators consist of a diaphragm which floats between a main spring (top) and a valve (bottom). By turning the adjustment handle clockwise, the main spring is forced onto the rubber diaphragm which, in turn, is pressed onto the valve stem. When the spring pressure becomes greater than the air pressure in the control chamber below the diaphragm, the valve is forced down and flow begins. As flow continues, the pressure begins to build and air fills the control chamber, forcing the diaphragm upward. As forces balance, the small spring under the valve piston causes the valve to close. The cycle continues in a balanced process of reducing or increasing flow based upon the downstream pressure.

Features

- Three convenient sizes
- High flow in compact size
- Locking adjustment knob
- Four different pressure ratings available
- Relieving or non-relieving models
- Can be installed as modular or individual unit
- Standard output pressure 0-125 PSIG

Internal Check - Style 'K'

The 22 and 32 Series are offered with an optional internal check valve. This allows the regulator to function between a valve and cylinder and not be damaged by the constant change in direction of flow. Excellent for applications where multiple pressures are required from one supply valve.

Piston Operator - Style 'P'

The 14, 22, and 32 Series are offered with an optional Piston Operator. A Piston Regulator will achieve extremely high cycle rates with limited wear. Ideal for applications where immediate flow is required. It is standard on the Internal Check Regulator.

Specifications

	14 Series	22 Series	32 Series
Temperature Range (ºF)	40-120	40-120	40-120
Temperature Range (ºC)	4-50	4-50	4-50
Max. Pressure (PSIG)	250	200	200
Max. Pressure (BAR)	17	14	14
Weight (lbs.)	.65	.69	1.37
Weight (kg)	.30	.31	.62
body material	zinc	aluminum	aluminum

How to Order

R 32 R - 04 GP

Model:
R = Regulator

Series:
14
22
32

Style:
R = relieving
N = non-relieving
K = internal check
P = piston operator

Threads:
- = NPTF
G = G tap (BSPP)
R = PT (BSPT)

Port Size:
01 = 1/8 (14 series only)
02 = 1/4 (14 or 22 series only)
03 = 3/8 (22 series only)
04 = 1/2 (22 or 32 series only)
06 = 3/4 (32 series only)

Options (see pg 101):
G = gauge
H = 0-200 PSIG output (22 or 32 Series)
I = 0-25 PSIG output
L = 0-60 PSIG output
P = panel mount nut
T = tamper resistant (14 or 22 Series)

NOTE: *All BSPP (G tap) and BSPT (R tap) models use BSPT gauge threads*

NEED MORE PARTS AND INFORMATION?
- **See page 119 for information on ordering replacement filters, bowls, etc.**
- **See page 101 for more information on available options.**

ORDER ONLINE

Product Cross Section

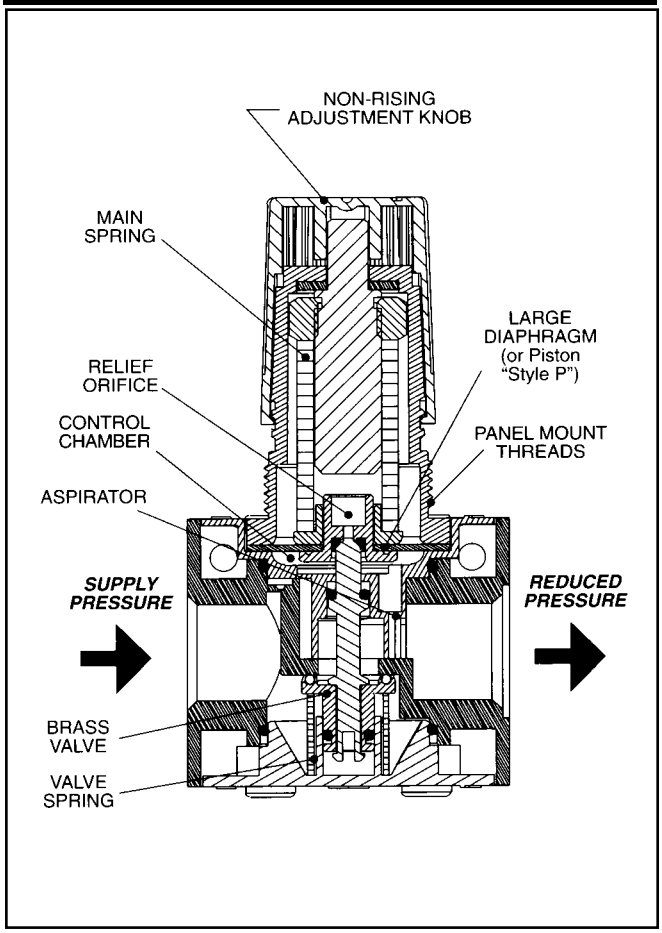

Dimensions Dimensions in inches (millimeters in parenthesis)

14 Series Regulator

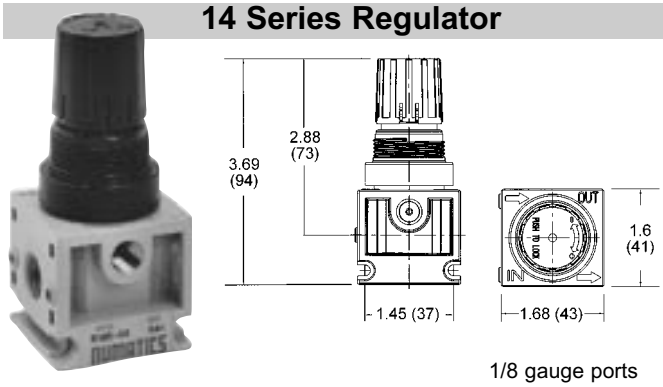

1/8 gauge ports

22 Series Regulator

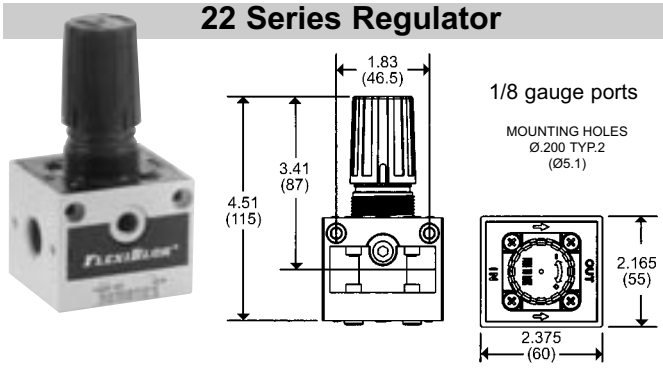

1/8 gauge ports

MOUNTING HOLES
Ø.200 TYP.2
(Ø5.1)

32 Series Regulator

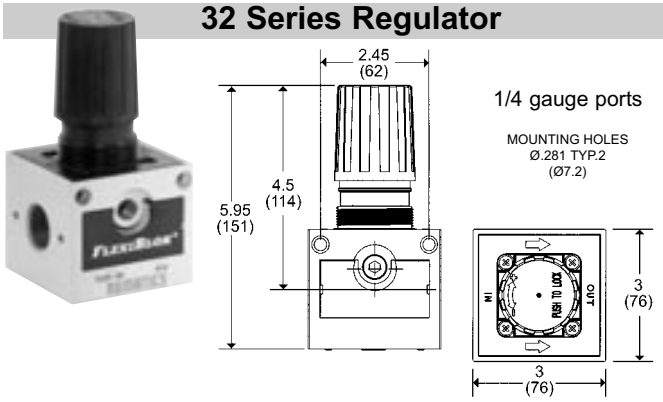

1/4 gauge ports

MOUNTING HOLES
Ø.281 TYP.2
(Ø7.2)

Notes

Reduced Pressure Adjustment To adjust reduced pressure settings, lift knob and turn (clockwise to increase pressure setting or counter clockwise to lower setting). With relieving type regulators, adjustment for lower reduced pressure follows adjustment of the screw. With non-relieving regulators, adjustment for lower reduced pressure will not be reached until the reduced pressure system is "bled off" or until air flow starts.

Cleaning Erratic regulator operation or loss of regulation is almost always due to dirt in the diaphragm area. To clean, shut off and depressurize the air line and disassemble the regulator. Clean parts with household soap and blow out with compressed air. When reassembling, make sure the disc assembly is firmly in place and the valve stem fits into the center hole of the diaphragm assembly. Tighten cage slightly more than "hand tight."

Flow Rates based on 100 PSIG (7 BAR) inlet

R14R-02 (14 Series Regulator)

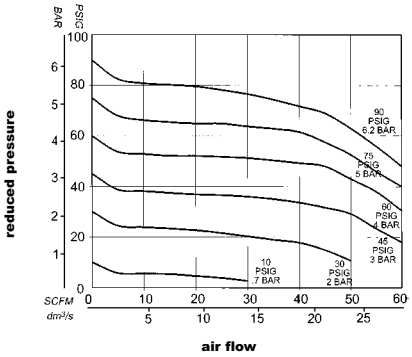

R22R-04 (22 Series Regulator)

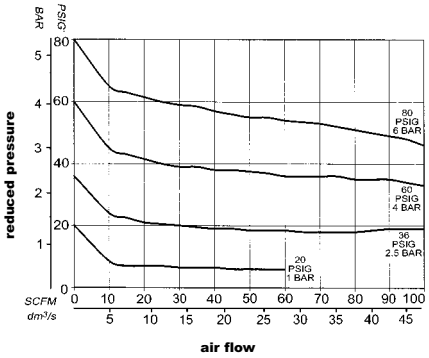

R32R-06 (32 Series Regulator)

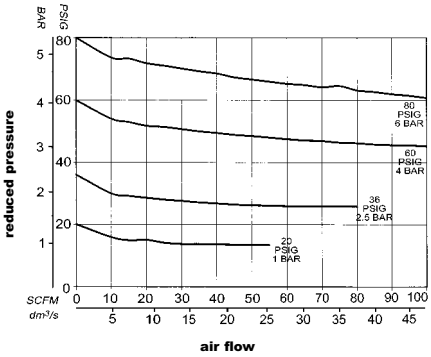

ORDER ONLINE

Numatics **FLEXIBLOK**® FRL Series

MANIFOLD REGULATOR MR14 Series

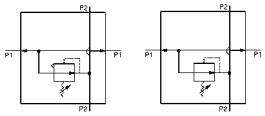

ANSI SYMBOL (RELIEVING) ANSI SYMBOL (NON-RELIEVING)

MR14R-02 pictured

Application

The 14 Series Manifold Regulator allows several regulators to be chained together while maintaining a constant primary pressure to each regulator. This regulator features a dual spring design which covers any possible outlet setting without the need to indicate a specific spring, eliminating confusing options and part numbers. The regulator uses the inner spring for more precise, lower pressures, and the outer spring for middle to high pressures. As the smaller, inner spring is compressed, the larger, outer spring takes over for higher pressures.

Regulators consist of a piston which floats between the main springs (top) and a valve stem (bottom). By turning the adjustment knob clockwise, the main spring is forced onto the piston which, in turn, is pressed onto the valve stem. When the spring force becomes greater than the force of the air pressure in the control chamber below the piston, the valve is forced down and flow begins. As flow continues, the pressure begins to build and air, via the aspirator tube, fills the control chamber. When the underside piston force is greater than the main spring force, the piston is forced upward, causing the main valve to close. The cycle continues in a balanced process of reducing or increasing flow based upon the downstream pressure.

Features

- High flow in compact size
- Locking adjustment knob
- Single pressure range suits any application
- Relieving or non-relieving models
- Can be installed as modular or individual unit
- Standard output pressure 0-125 PSIG

Specifications

Temperature Range (ºF)	40-120
Temperature Range (ºC)	4-50
Max. Pressure (PSIG)	250
Max. Pressure (BAR)	17
Weight (lbs.)	.60
Weight (kg)	.27
body material	zinc

How to Order

MR 14 R - 02 GT

Model: MR = Manifold Regulator

Series: 14

Style: R = relieving; N = non-relieving

Threads (all ports): - = NPTF; G = G tap (BSPP); R = PT (BSPT)

Port Size: 02 = 1/4

Options (see pg 101): G = gauge (0-160 std); P = panel mount nut; T = tamper resistant

NOTE: *If a reduced or stabilized pressure is necessary downstream of the manifold regulator, a standard regulator (R14 series, pg. 24) must be used after the manifold regulator.*

NOTE: *Manifold Regulator Gauges are different than standard Regulator Gauges - 1/4 back and 1.5" face. For lower pressure ratings (0-60) and gauge ordering info, see page 103*

NEED MORE PARTS AND INFORMATION?

- **See page 119 for information on ordering replacement filters, bowls, etc.**
- **See page 101 for more information on available options.**

ORDER ONLINE

Product Cross Section

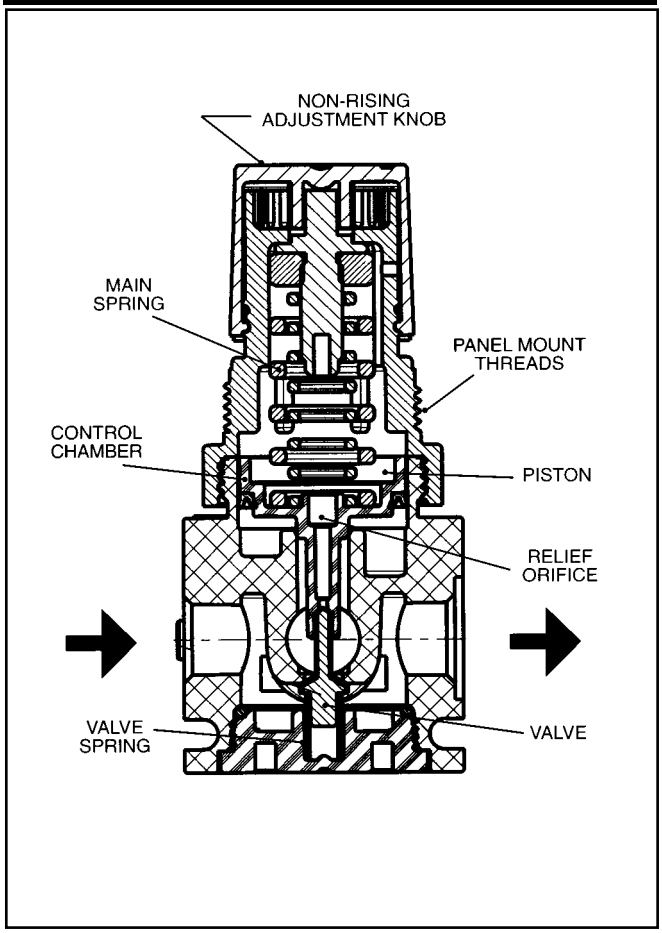

Dimensions Dimensions in inches (millimeters in parenthesis)

14 Series Manifold Regulator

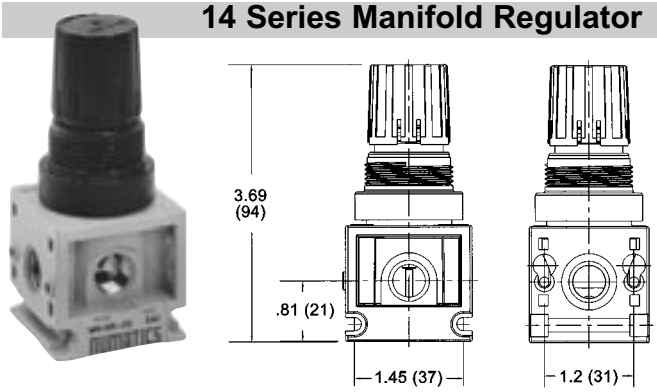

1/8 gauge ports

MOUNTING HOLES
Ø.300 TYP.2 (Ø7.6)

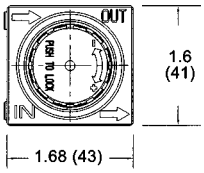

Notes

Reduced Pressure Adjustment To adjust reduced pressure settings, lift knob and turn (clockwise to increase pressure setting or counter clockwise to lower setting). With relieving type regulators, adjustment for lower reduced pressure follows adjustment of the screw. With non-relieving regulators, adjustment for lower reduced pressure will not be reached until the reduced pressure system is “bled off” or until air flow starts.

Cleaning Erratic regulator operation or loss of regulation is almost always due to dirt in the diaphragm area. To clean, shut off and depressurize the air line and disassemble the regulator. Clean parts with household soap and blow out with compressed air. When reassembling, make sure the disc assembly is firmly in place and the valve stem fits into the center hole of the diaphragm assembly. Tighten cage slightly more than “hand tight.”

Flow Rates based on 100 PSIG (7 BAR) inlet

R14R-02 (14 Series Regulator)

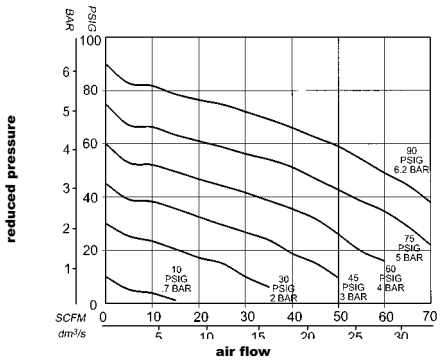

ORDER ONLINE

Numatics **FLEXIBLOK**® FRL Series

PILOT OPERATED REGULATOR

R22W, R32W Series

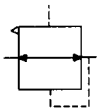

ANSI SYMBOL

R32W-04 pictured

Application

Pilot Operated Regulators are adapted for control by a remote or distant small pilot regulator. These models are ideal for maximum capacity requirements in applications where standard models would not be readily accessible.

The regulator uses an 1/8 port located on the top of the unit to connect from the 'out' port of a pilot regulator. Pressurizing of the pilot port applies a force to the top diaphragm, causing the diaphragm assembly to move downward, which in turn opens the main valve and allows air flow across the seat area. Downstream pressure is sensed by the lower diaphragm and, when it equals or exceeds the force applied to the upper diaphragm, shifts the diaphragm assembly upward, causing the main valve to seat and revert to a no-flow condition.

Features

- Two convenient sizes
- High flow
- Relieving or non-relieving models
- Reduced pressure within 5-7 PSIG of pilot pressure
- Modular with the rest of the **FLEXIBLOK**® system

Specifications

	22 Series	32 Series
Temperature Range (ºF)	40-120	40-120
Temperature Range (ºC)	4-50	4-50
Min. Pilot Pressure (PSI)	15	15
Min. Pilot Pressure (BAR)	1	1
Max. Pilot Pressure (PSI)	150	150
Max. Pilot Pressure (BAR)	10.2	10.2
Max. Supply Pressure (PSI)	150	150
Max. Supply Pressure (BAR)	10.2	10.2
Weight (lbs.)	.66	1.35
Weight (kg)	.25	.50
body material	aluminum	aluminum

How to Order

R 32 W - 04 G

Model:
R = Regulator

Series:
22
32

Style:
W = all Pilot Operated Regulators

Threads:
- = NPTF
G = G tap (BSPP)
R = PT (BSPT)

Port Size:
02 = 1/4 (22 series only)
03 = 3/8 (22 series only)
04 = 1/2 (22 or 32 series only)
06 = 3/4 (32 series only)

Options (see pg 101):
G = gauge
N = non-relieving

NOTE: *All BSPP (G tap) and BSPT (R tap) models use BSPT gauge threads*

NEED MORE PARTS AND INFORMATION?
- **See page 119 for information on ordering replacement filters, bowls, etc.**
- **See page 101 for more information on available options.**

ORDER ONLINE

Product Cross Section

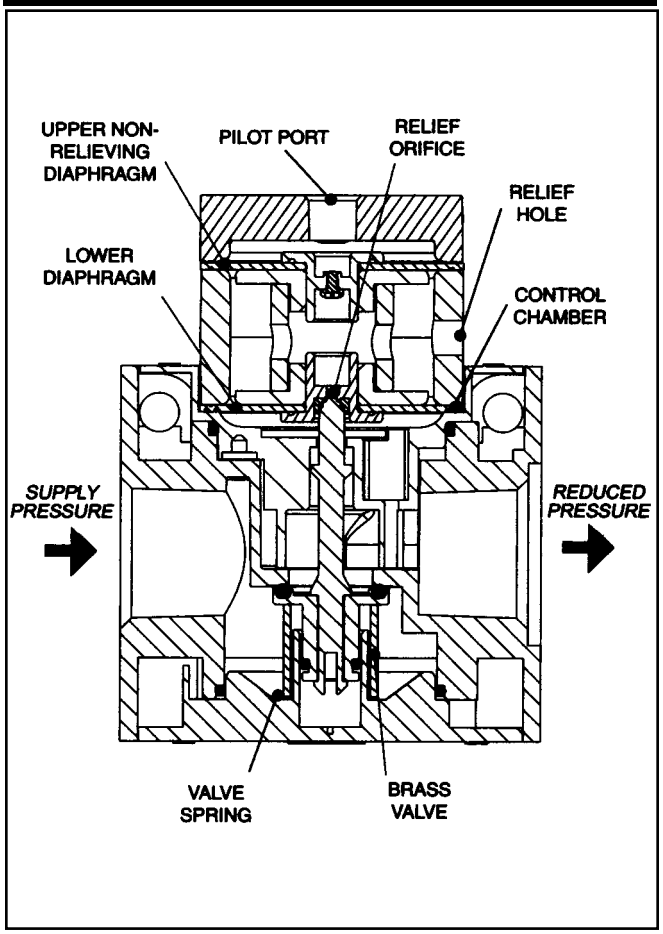

Dimensions

Dimensions in inches (millimeters in parenthesis)

22 Series Pilot Operated Regulator

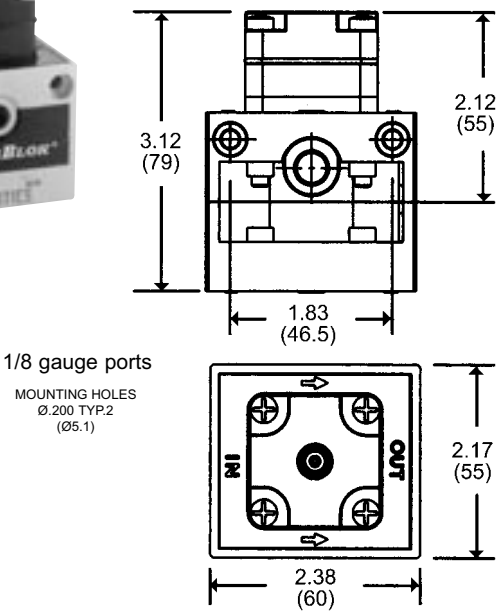

32 Series Pilot Operated Regulator

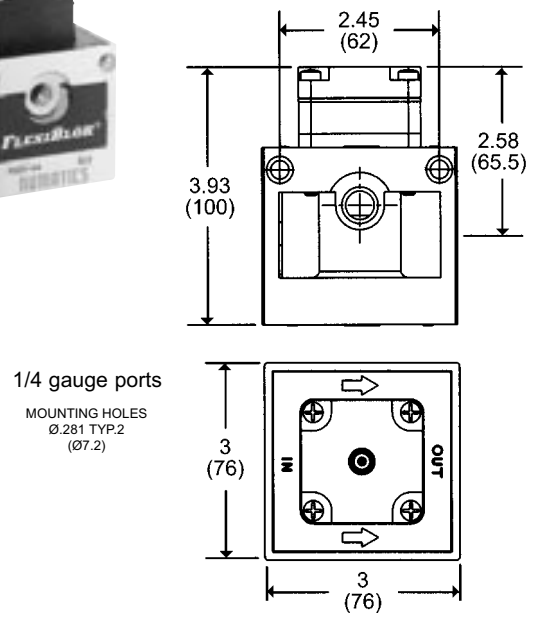

Notes

Installation The springs and bonnet of the regulators are replaced by a pilot diaphragm assembly that operates the main diaphragm assembly by moving a connecting bushing. A remote regulator is connected to the pilot port to control the pilot regulator.

Cleaning Erratic regulator operation or loss of regulation is almost always due to dirt in the diaphragm area. To clean, shut off and depressurize the air line and disassemble the regulator. Clean parts with household soap and blow out with compressed air. When reassembling, make sure the lower diaphragm disc assembly is firmly in place and the valve stem fits into the center hole of the diaphragm assembly. Tighten the four screws on the top of the regulator “hand tight”.

Flow Rates

based on 100 PSIG (7 BAR) inlet

R22W-04 (22 Series Pilot Operated Regulator)

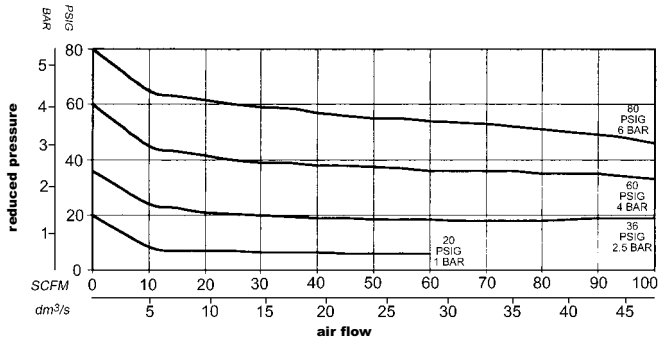

R32W-06 (32 Series Pilot Operated Regulator)

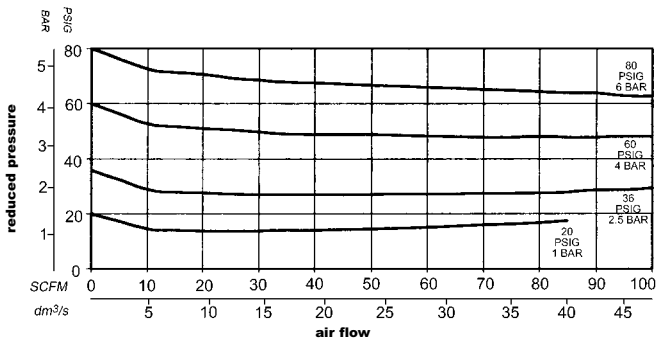

ORDER ONLINE

Numatics **FLEXIBLOK**® FRL Series

PARTICULATE FILTER/REGULATOR

P14B, P22B, P32B Series

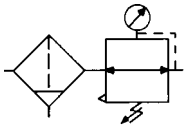

ANSI SYMBOL

P32B-06 pictured

Application

The integral part of the filter/regulator ('piggyback') is a two station component designed to filter and regulate compressed air when cost and space are of primary concern. As wet, dirty air enters, it immediately flows through the air deflector, causing the air to move in a swirling motion. After condensed water is centrifugally removed, air passes through the filter and into the regulator. The air pressure is systematically reduced and exits the housing as clean, dry air that is ready to work at the specified pressure.

NOTE: see separate filter (pg. 20) and regulator (pg. 24) pages for additional information.

Features

- Three convenient sizes
- 5 micron element standard
- Can be installed as individual or modular unit
- Non-rising knob
- Optional CircleVision™ sight bowl
- Optional metal bowl with sight glass
- Standard output pressure 0-125 PSIG
- Bowl seal held captive (22 and 32 Series)

Specifications

	Polycarbonate Bowl	CircleVision™ Bowl	Metal (Zinc) bowl w/ Sight Glass
Temperature Range (ºF)	40-120	40-120	40-120
Temperature Range (ºC)	4-50	4-50	4-50
Max. Pressure (PSIG)	150	250	200
Max. Pressure (BAR)	10	17	14
14 Series (Weight, lbs.)	.75	-	.80
14 Series (Weight, kg)	.34	-	.37
22 Series (Weight, lbs.)	.91	1.2	1.5
22 Series (Weight, kg)	.41	.55	.68
32 Series (Weight, lbs.)	1.81	2.34	2.94
32 Series (Weight, kg)	.82	1.06	1.34

How to Order

P 14 B - 02 GIP

Model:
P = Particulate/ Regulator

Series:
14 = 1.5 oz bowl
22 = 3.8 oz bowl
32 = 8.5 oz bowl

Threads:
- = NPTF
G = G tap (BSPP)
R = PT (BSPT)

Element:
B = 5 micron element

Port Size:
01 = 1/8 (14 series only)
02 = 1/4 (14 or 22 series only)
03 = 3/8 (22 series only)
04 = 1/2 (22 or 32 series only)
06 = 3/4 (32 series only)

Options (see pg 101):
A* = auto drain (22 and 32 series)
B = flexible drain
C = CircleVision™ Sight Bowl (22 and 32 series)
G = gauge
H* = 0-200 PSIG output
I = 0-25 PSIG output
J = external pulse drain
L = 0-60 PSIG output
M = metal bowl with sight glass
N = non-relieving
P = panel mount nut
Q = metal manual drain
R = manual lever drain
T = tamper resistant (14 or 22 Series)

* = 'A' and 'H' options cannot be used together

NOTE: *To order a piston style filter/regulator, add 'P' to the model number (i.e. P32BP-02GIP)*

NOTE: *All BSPP (G tap) and BSPT (R tap) models use BSPT gauge threads*

NEED MORE PARTS AND INFORMATION?
- **See page 119 for information on ordering replacement filters, bowls, etc.**
- **See page 101 for more information on available options.**

ORDER ONLINE

Product Cross Section

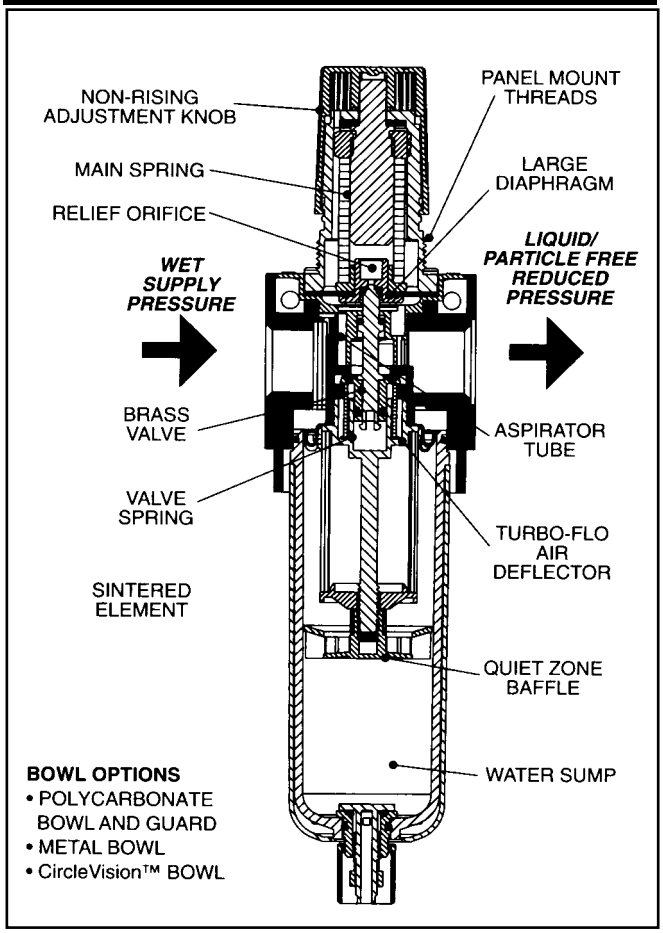

Dimensions Dimensions in inches (millimeters in parenthesis)

14 Series Filter/Regulator

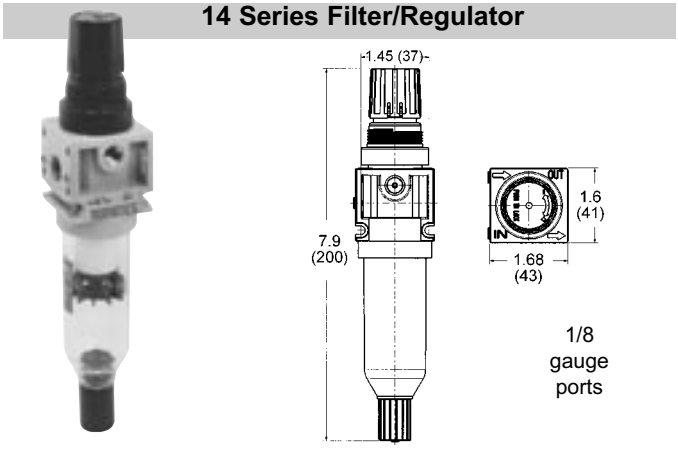

22 Series Filter/Regulator

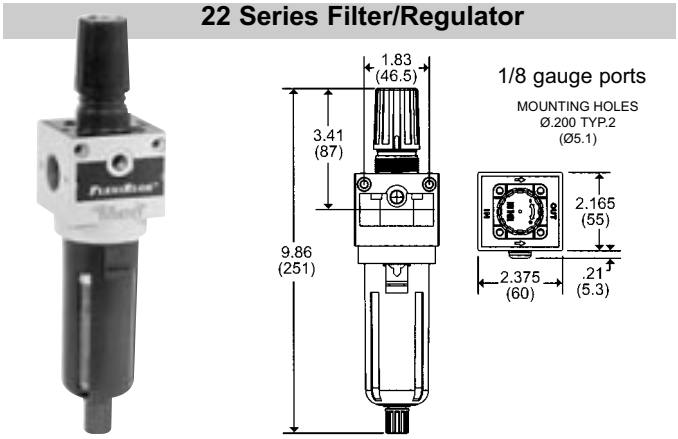

32 Series Filter/Regulator

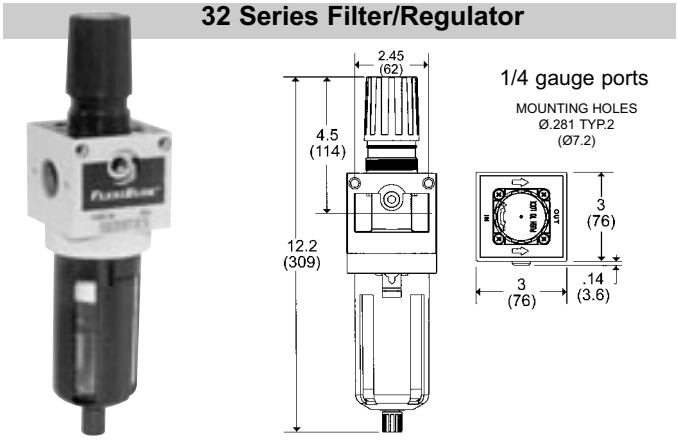

Notes

Maintenance Flush piping before installation. To maintain maximum efficiency of the filter and to avoid excessive pressure drop the filter must be kept clean. On standard filters, open the drain (turn counter-clockwise for standard drain models) periodically to expel contents of bowl before it reaches the level of the lower baffle.

Filter Cleaning Removal from operation is not necessary to clean the filter. Disassembly is simple and can be performed inline. Before disassembling, shut off air supply and depressurize the filter. Clean all parts (except the filter element) with household soap and blow out filter body before reassembling.

Element Replacement Elements should be replaced after a pressure drop of 10 PSID has been reached or after 1 year, whichever occurs first

Reduced Pressure Adjustment To adjust reduced pressure settings, lift knob and turn (clockwise to increase pressure setting or counter clockwise to lower setting). With relieving type regulators, adjustment for lower reduced pressure follows adjustment of the screw. With non-relieving regulators, adjustment for lower reduced pressure will not be reached until the reduced pressure system is "bled off" or until air flow starts.

Regulator Cleaning Erratic regulator operation or loss of regulation is almost always due to dirt in the diaphragm area. To clean, shut off and depressurize the air line and disassemble the regulator. Clean parts with household soap and blow out with compressed air. When reassembling, make sure the disc assembly is firmly in place and the valve stem fits into the center hole of the diaphragm assembly. Tighten cage slightly more than "hand tight."

Flow Rates based on 100 PSIG (7 BAR) inlet

P14B-02 (5 micron particulate)

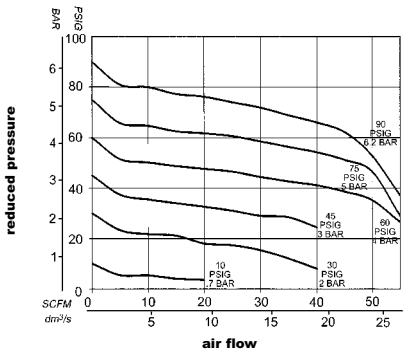

P22B-04 (5 micron particulate)

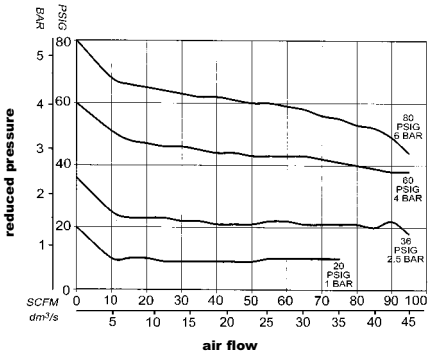

P32B-06 (5 micron particulate)

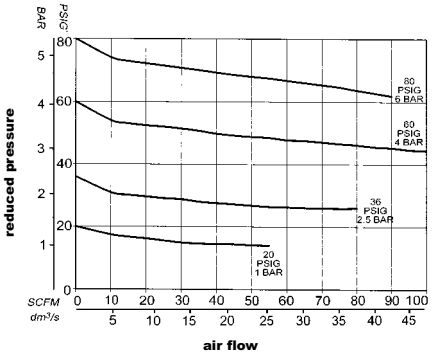

ORDER ONLINE

Numatics **FLEXIBLOK**® FRL Series

COALESCING FILTER/REGULATOR

C14D, C22D, C32D Series

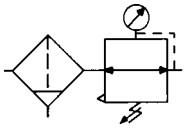

ANSI SYMBOL

C32D-06 pictured

Application

The Numatics C Series Coalescer/Regulator is a two station point of use air preparation system designed to provide superior filtration and regulation in one compact housing.

The C Series combines a multiple support cartridge style borosilicate glass element with a pilot balanced regulator to assure the maximum performance of downstream components.

Available with four different element grade choices, the C Series Coalescer/Regulator can be outfitted to attack and remove the exact type of contamination that is critical to a specific application.

Features

- Cartridge element design
- Inner/outer support cores prevent element from crushing in either flow direction
- Connects easily to **FLEXIBLOK**® Modular system
- Four element grades available

Recommended Uses

C grade element, identified by its blue drain layer, is a coarse filter for large amounts of water, rust, pipe scale, and liquid hydrocarbons. Excellent for environments that have severe contamination. Can be used for lubricated or 'dry' systems. Ideal for mainline filtration of plant air.
D grade element, identified by its green drain layer, is a fine filter for cylinder or valves - especially when the circuit is being run without lubrication ('dry'). Excellent filter for desiccant or regenerative style dryers.
E grade element, identified by its red drain layer, is an ultra fine filter for oil-free instrumentation air, blow molding, food and drug packaging, electronics applications, and other applications requiring maximum contamination removal.
F grade element, identified by its white drain layer, is an adsorbing filter that utilizes activated carbon to capture hydrocarbon vapor and deodorize compressed air. Typically it is used to protect worker environments, food and drug applications, breathing air, and instrumentation for analytical instruments. Life expectancy is approximately 3 months at rated flow.

Prefilter Option - Suffix 'D'

Models using the C, D, or E grade elements can be equipped with an optional 3 micron internal prefilter. The prefilter provides additional protection for the fine borosilicate fibers. Ideal for the removal of high levels of solid contamination.

Specifications

	Polycarbonate Bowl	CircleVision™ Bowl	Metal (Zinc) bowl w/ Sight Glass
Temperature Range (ºF)	40-120	40-120	40-120
Temperature Range (ºC)	4-50	4-50	4-50
Max. Pressure (PSIG)	150	250	200
Max. Pressure (BAR)	10	17	14
14 Series (Weight, lbs.)	.80	N/A	.85
14 Series (Weight, kg)	.35	N/A	.38
22 Series (Weight, lbs.)	.92	1.2	1.6
22 Series (Weight, kg)	.42	.55	.73
32 Series (Weight, lbs.)	1.82	2.35	2.95
32 Series (Weight, kg)	.83	1.07	1.34

How to Order

C 32 C - 06 AGNQ

Model:
C = Coalescer/ Regulator

Series:
12 = 1.5 oz. bowl
22 = 3.8 oz. bowl
32 = 8.5 oz. bowl

Threads:
- = NPTF
G = G tap (BSPP)
R = PT (BSPT)

Element:
C = .7 micron coarse coalescer
D = .3 micron fine coalescer
E = .1 micron ultra fine coalescer
F = vapor adsorber

Port Size:
01 = 1/8
02 = 1/4
03 = 3/8
04 = 1/2
06 = 3/4

Options (see pg 101):
A* = auto drain (22 and 32 only)
B = flexible drain
C = CircleVision™ sight bowl
D = 3 micron, internal pleated prefilter
G = gauge
H* = 0-200 PSIG output
I = 0-25 PSIG output
J = external pulse drain
L = 0-60 PSIG output
M = metal bowl with sight glass
N = non-relieving
P = panel mount nut
Q = metal manual drain
R = manual lever drain
T = tamper-resistant (14 and 22 only)
* = 'A' and 'H' options cannot be used together

NOTE: *All BSPP (G tap) and BSPT (R tap) models use BSPT gauge threads*

NEED MORE PARTS AND INFORMATION?
- **See page 119 for information on ordering replacement filters, bowls, etc.**
- **See page 101 for more information on available options.**

ORDER ONLINE

Product Cross Section

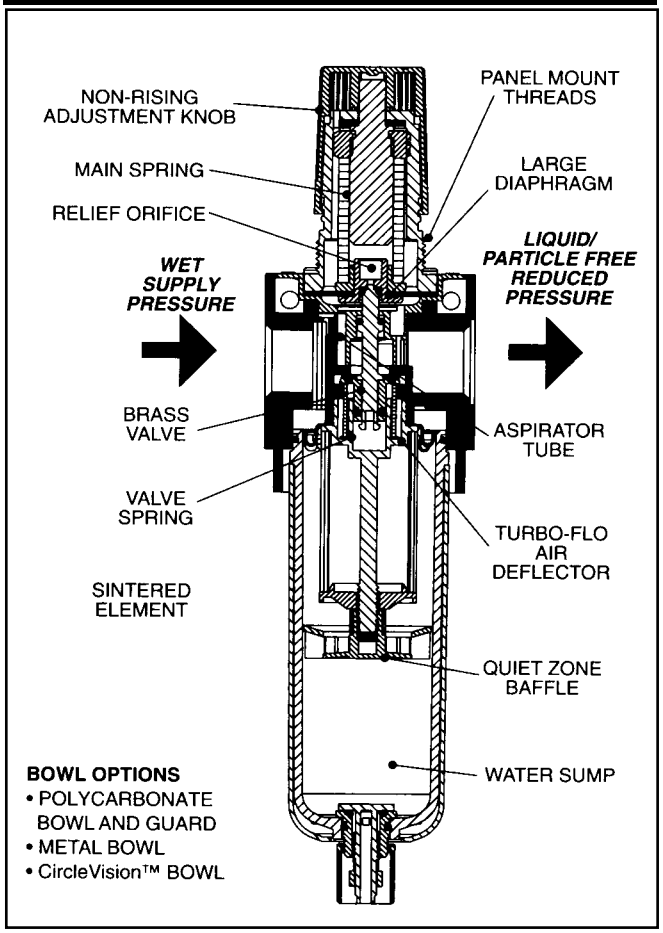

Dimensions Dimensions in inches (millimeters in parenthesis)

14 Series Coalescer/Regulator

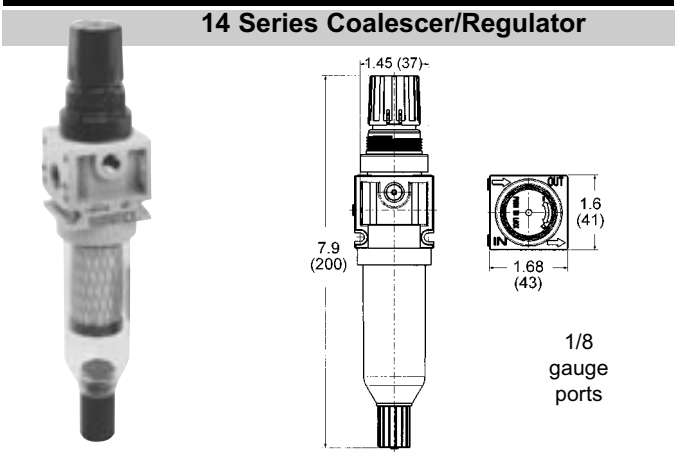

22 Series Coalescer/Regulator

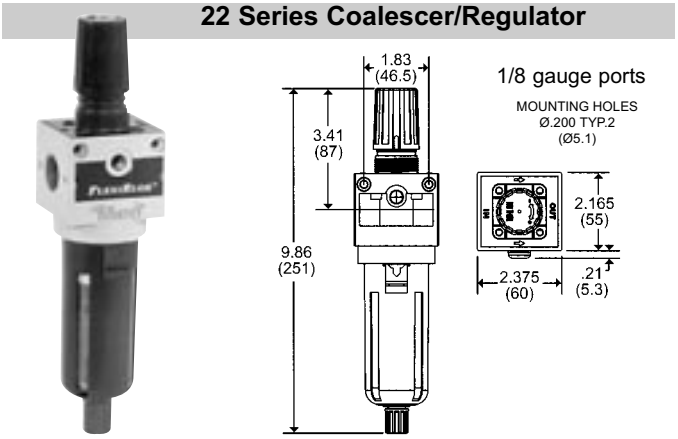

32 Series Coalescer/Regulator

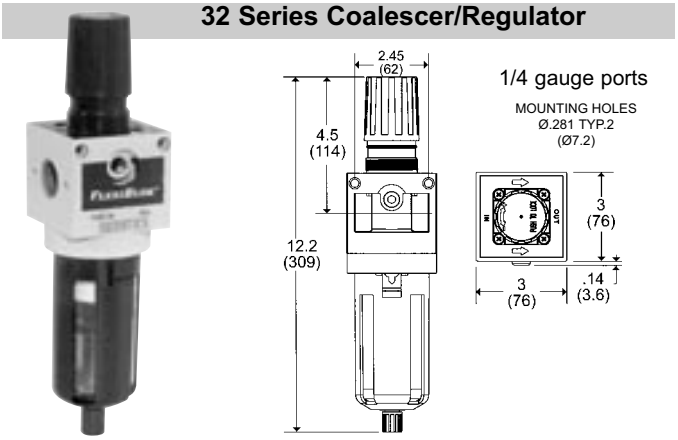

Notes

Maintenance Flush piping before installation. To maintain maximum efficiency of the filter and to avoid excessive pressure drop the filter must be kept clean. On standard filters, open the drain (turn counter-clockwise for standard drain models) periodically to expel contents of bowl before it reaches the level of the lower baffle.

Filter Cleaning Removal from operation is not necessary to clean the filter. Disassembly is simple and can be performed inline. Before disassembling, shut off air supply and depressurize the filter. Clean all parts (except the filter element) with household soap and blow out filter body before reassembling.

Element Replacement Elements should be replaced after a pressure drop of 10 PSID has been reached or after 1 year, whichever occurs first

Reduced Pressure Adjustment To adjust reduced pressure settings, lift knob and turn (clockwise to increase pressure setting or counter clockwise to lower setting). With relieving type regulators, adjustment for lower reduced pressure follows adjustment of the screw. With non-relieving regulators, adjustment for lower reduced pressure will not be reached until the reduced pressure system is "bled off" or until air flow starts.

Regulator Cleaning Erratic regulator operation or loss of regulation is almost always due to dirt in the diaphragm area. To clean, shut off and depressurize the air line and disassemble the regulator. Clean parts with household soap and blow out with compressed air. When reassembling, make sure the disc assembly is firmly in place and the valve stem fits into the center hole of the diaphragm assembly. Tighten cage slightly more than "hand tight."

Flow Rates based on 100 PSIG (7 BAR) inlet

C14D-02 (5 micron particulate)

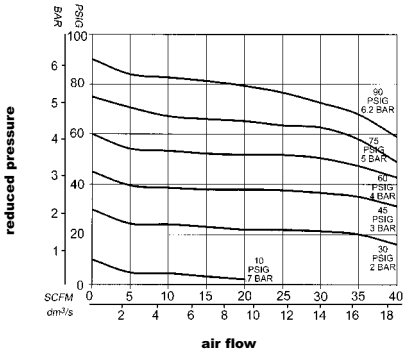

C22D-04 (5 micron particulate)

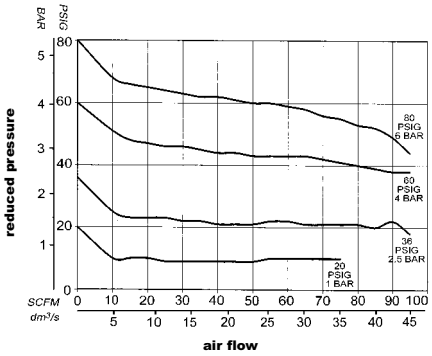

C32D-06 (5 micron particulate)

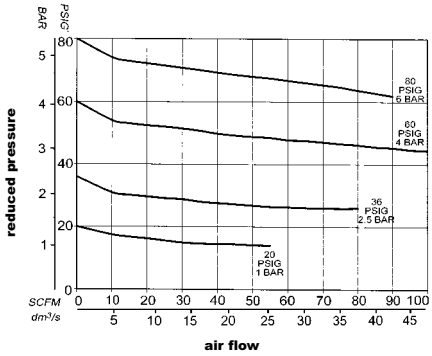

ORDER ONLINE

Numatics **FLEXIBLOK**® FRL Series

LUBRICATOR L14L, L22L, L32L Series

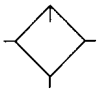

ANSI SYMBOL

L32L-04 pictured

Application

Usually mounted third in the FRL Series, the lubricator is designed to inject oil aerosols into the airstream of a pneumatic circuit. As air flows from the regulator, some air is diverted from the main orifice and is allowed to flow through the fill under pressure bleed assembly and pressurize the bowl. This forces oil up the siphon tube past a flow check and into the integral valve/sight dome. The oil film then drops through the valve and into the atomization chamber at a rate that is automatically proportional to the air flow. This virtually eliminates the need for readjustment. The Numatics lubricator can begin delivering lubrication at flows less than 2 SCFM.

Features

- Three convenient sizes
- Lubrication to begin at less than 2 SCFM
- Can be filled under pressure (22 and 32 series only)
- Tamper-resistant knob standard
- Optional CircleVision™ sight bowl
- Optional metal bowl with sight glass
- Can be mounted as individual or modular unit
- Button head fill optional on all sizes
- Atomizing chamber develops longer life aerosols

Specifications

	14 Series	22 Series	32 Series
Temperature Range (ºF)	40-120	40-120	40-120
Temperature Range (ºC)	4-50	4-50	4-50
Max. Pressure (PSIG)	200	200	200
Max. Pressure (BAR)	14	14	14
Weight (lbs.)	.60	.69	1.37
Weight (kg)	.27	.31	.62
body material	zinc	aluminum	aluminum

Finding the Proper Lubricant

The proper lubrication of air tools, valves, cylinders, motors, etc. requires the use of an oil that is specifically recommended for use in air line lubricators. An air line lubricant is often subjected to very adverse conditions - high temperatures, dirty air, and oxidation caused by flowing air are just a few. Pneumatic devices are likely subjected to these same conditions in addition to sitting idle for long periods of time. Unless the oil has superior oxidation stability and high film strength, it will blow off the surfaces to be oiled leaving a tacky residue known as 'varnish'.

An important criterion is viscosity. If an oil is too heavy, it will not be atomized and carried downstream to the component requiring lubrication. Often it will reclassify in the pipe. While it is impossible to guarantee the success of any lubricating oil because of the variables, oils having the following characteristics usually perform quite well:

- Viscosity: 100-150 SUS at 100ºF
- High viscosity index: over 90
- Superior oxidation stability as determined by ASTM test D943: over 2000
- Anti-foaming
- High film strength
- Compatible with Buna N rubber
- Aniline range: 180-210

A lubricant that works well is Mobil D.T.E.® Light Lubricating Oil from Mobil Chemical company. This oil meets all of the foregoing specifications. Many other good lubricants are available. Consult your Numatics representative for his recommendations.

How to Order

L 22 L - 02 CF

Model:
L = Lubricator

Series:
14 = 1.5 oz. bowl
22 = 3.8 oz. bowl
32 = 8.5 oz. bowl

Style:
L = Standard Lubricators

Threads:
- = NPTF
G = G tap (BSPP)
R = PT (BSPT)

Port Size:
01 = 1/8 (14 series only)
02 = 1/4 (14 or 22 series only)
03 = 3/8 (22 series only)
04 = 1/2 (22 or 32 series only)
06 = 3/4 (32 series only)

Options (see pg 101):
C = CircleVision™ sight bowl (22 and 32 Series only)
F = button head fill
K = drain on bowl
M = metal bowl with sight glass

NEED MORE PARTS AND INFORMATION?
- **See page 119 for information on ordering replacement filters, bowls, etc.**
- **See page 101 for more information on available options.**

ORDER ONLINE

Product Cross Section

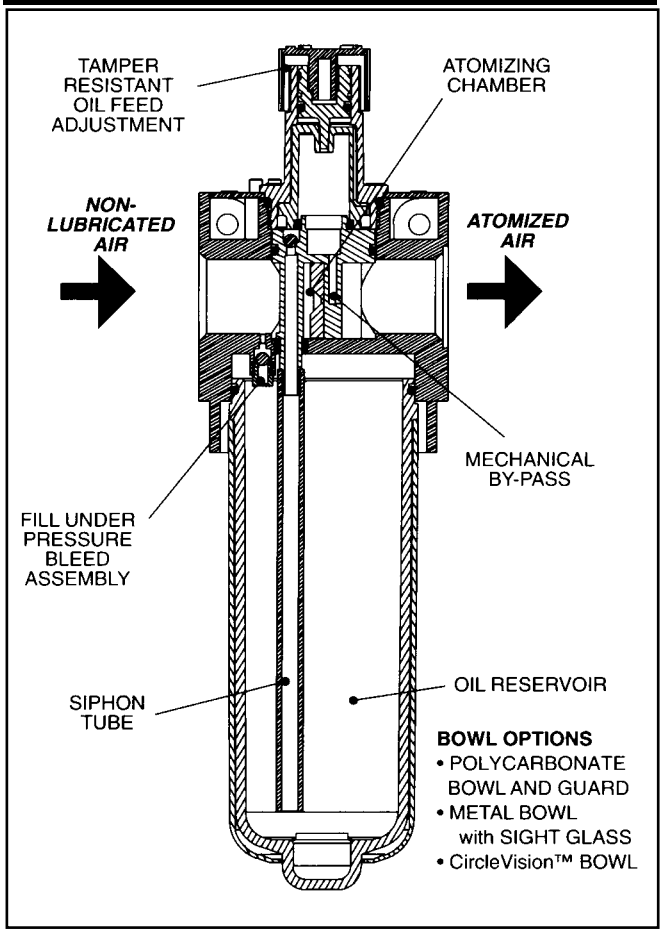

Dimensions

Dimensions in inches (millimeters in parenthesis)

14 Series Lubricator

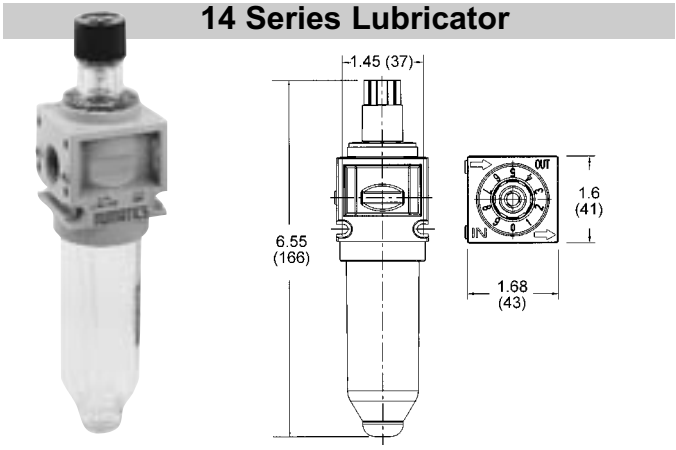

22 Series Lubricator

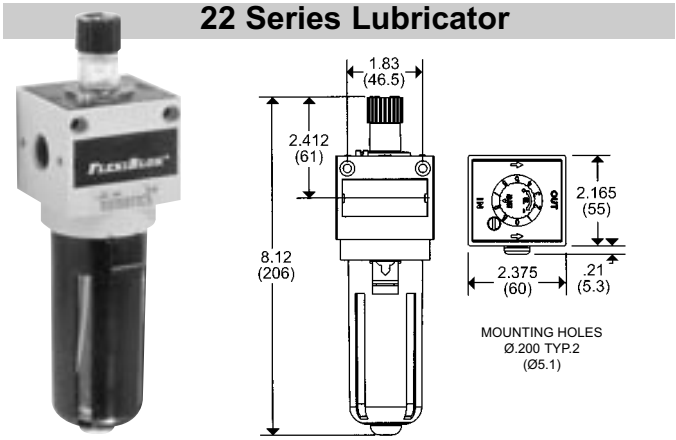

32 Series Lubricator

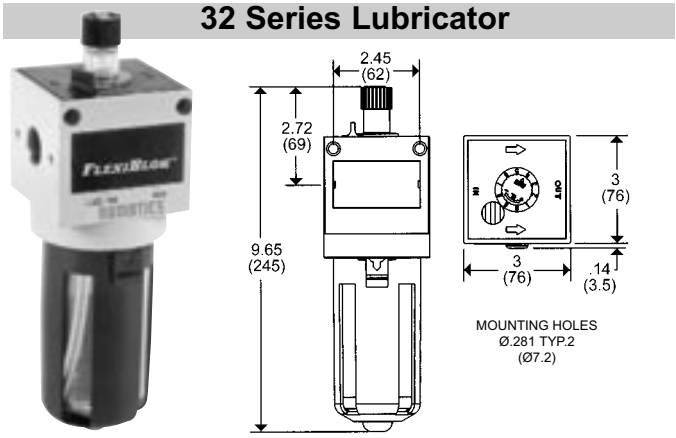

Notes

Filling 22 and 32 Series lubricators may be filled while under pressure and without shutting down equipment. An oil can with a long spout must be used in order to fill through the fill port. Slowly remove fill plug and insert tip of spout to bottom of fill port recess or oil blow back may occur. Fill to within 1" from the top of the bowl. Lubricators may also be filled through the button head fill.

Adjustment To adjust oil drip rate, turn on the air, start flow, and set knob to obtain the desired drip rate (visible through the sight dome). As a start, one or two drops per minute is suggested, correct lubrication being a matter of experience and demand. Clockwise rotation of knob decreases oil feed rate. To check lubrication, hold thumbnail or a mirror near the equipment exhaust. A heavy film indicates over-lubrication and the drip rate should be reduced by turning the knob to a lower setting.

Maintenance If both air and oil are kept clean and the oil level never allowed below the end of the siphon tube in the bowl, the lubricator should provide long, unattended service. When oil stops dripping through the sight dome, irrespective of knob adjustment, it is indicative of necessary cleaning.

Cleaning It is not necessary to remove the lubricator from the line to clean. First, depressurize and disassemble the unit. In most cases, cleaning is only needed in the oil metering area. Pull off the adjusting knob and unscrew the sight dome assembly, then remove the inner drip spout and clean with household soap. *Plastic bowls must be cleaned with household soap only.*

Flow Rates

L14L-02 (14 Series Lubricator)

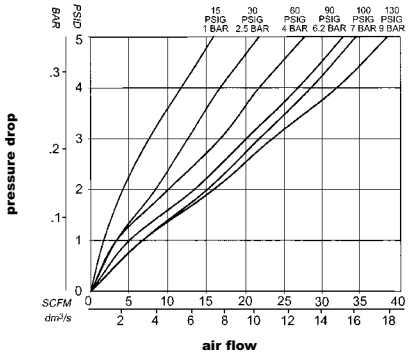

L22L-04 (22 Series Lubricator)

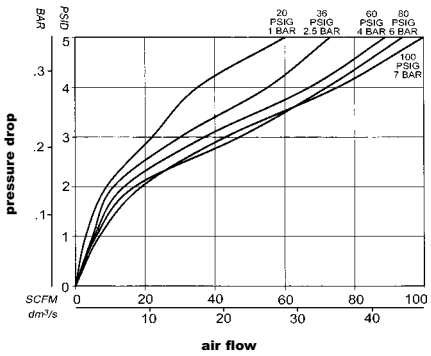

L32L-06 (32 Series Lubricator)

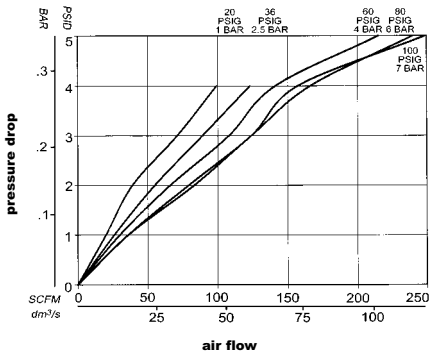

ORDER ONLINE

Numatics **FLEXIBLOK**® FRL Series

SOLENOID SOFT START QUICK EXHAUST VALVE

S22C, S32C Series

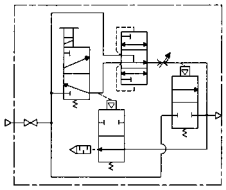

ANSI SYMBOL

S32C-04BELM pictured

Application

The S22C and S32C valves combine the gradual filling feature of an auto pilot soft start with the added features of a solenoid quick exhaust valve. Upon energizing the solenoid, pilot pressure is applied to the top of the spool, shifting the spool downward and closing the exhaust port. Pilot pressure is also applied to the shuttle valve, opening it, and allowing supply air to be metered downstream through the metering valve. When downstream pressure reaches approximately 60% of supply pressure, the spool opens the main valve, allowing full flow. When the solenoid is de-energized pilot pressure is removed, causing the spool to retract and opening the exhaust port. Downstream pressure then exhausts through the exhaust port. The shuttle valve also reseats, cutting off supply pressure.

Features

- Two convenient sizes
- Lockout feature prevents unauthorized pressurization of system
- High exhaust capacity for quick depletion of pressure
- High inlet to outlet flow capability
- Connects easily to **FLEXIBLOK**® Modular system
- Incorporated metering valve controls how quickly downstream pressure is reached, which controls the slow start feature

Specifications

22 Series Exhaust Ports (NPTF): 1/2
32 Series Exhaust Ports (NPTF): 1/2
22 Series Gauge Ports (NPTF): 1/8
32 Series Gauge Ports (NPTF): 1/4
Temperature Range (ºF): 40-120
Temperature Range (ºC): 4-50
Min. Pressure (PSIG): 60
Min. Pressure (BAR): 4
Max. Pressure (PSIG): 150
Max. Pressure (BAR): 10
22 Series Weight, lbs. (kg.): .94 (.43)
32 Series Weight, lbs. (kg.): 1.56 (.71)

Cv in-out/out-exh (22 Series, 1/4): 2 / 1.2
Cv in-out/out-exh (22 Series, 3/8): 2.87 / 1.38
Cv in-out/out-exh (22 Series, 1/2): 3.62 / 1.32
Cv in-out/out-exh (32 Series, 1/2): 5.24 / 3.01
Cv in-out/out-exh (32 Series, 3/4): 6.47 / 3.14
body material: aluminum
Wattage & Amperage:
110V AC: 1.42 watts / .022 amps
230V AC: 2.0 watts / .016 amps
24V AC: 2.0 watts / 0.011 amps
24V DC:2.0 watts / 0.08 amps

How to Order

S 32 C - 06 BFGLM

Model:
S = Solenoid Soft Start

Series:
22
32

Style:
C = Standard Solenoid Soft Start

Threads:
- = NPTF
G = G tap (BSPP)
R = PT (BSPT)

Port Size:
02 = 1/4 (22 only)
03 = 3/8 (22 only)
04 = 1/2 (22/32)
06 = 3/4 (32 only)

Options (see pg 101):
B = standard solenoid
E = 110V AC 50/60 Hz
F = 230V AC 50/60 Hz
J = 24V AC 50/60 Hz coil
K = 24V DC coil
L = plug with light
P = standard black plug ass'y
M = muffler
N = no manual override
G = gauge

NOTE: *All BSPP (G tap) and BSPT (R tap) models use BSPT gauge threads*

NEED MORE PARTS AND INFORMATION?
- **See page 119 for information on ordering replacement filters, bowls, etc.**
- **See page 101 for more information on available options.**

Numatics **FLEXIBLOK**® FRL Series

SOLENOID QUICK EXHAUST VALVE

S22E, S32E Series

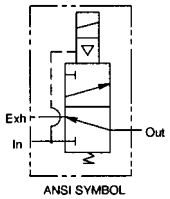

ANSI SYMBOL

S32E-04BELM pictured

Application

The S22E and S32E Solenoid Quick Exhaust Valves are high flow, high exhaust, normally closed, 3-ported, 2-position directional control shut-off valves which increases safety for machine operators. When the solenoid is energized, inlet air is applied to the top of the spool. The spool shifts downward, sealing the exhaust port and pushing down and opening the main valve, allowing full flow downstream. When the solenoid is de-energized, air is cut from the spool, allowing the springs to retract and the spool and main valve to return to their normally closed positions, thus rapidly exhausting all downstream air. The bottom exhaust port is tapped to allow for muffler installation.

Features

- Two convenient sizes
- Lockout feature (located in slide valve) prevents unauthorized pressurization of system
- Standard manual override (or with no manual override option)
- Low-wattage coil prevents high-temperatures
- High exhaust capacity for quick depletion of pressure
- High inlet to outlet flow capability
- Connects easily to **FLEXIBLOK**® Modular system

Specifications

22 Series Exhaust Ports (NPTF): 1/2
32 Series Exhaust Ports (NPTF): 1/2
22 Series Gauge Ports (NPTF): 1/8
32 Series Gauge Ports (NPTF): 1/4
Temperature Range (ºF): 40-120
Temperature Range (ºC): 4-50
Min. Operating Pressure (PSIG): 35
Min. Operating Pressure (BAR): 2.45
Max. Operating Pressure (PSIG): 150
Max. Operating Pressure (BAR): 10
22 Series Weight, lbs. (kg.): 1.15 (.53)
32 Series Weight, lbs. (kg.): 1.75 (.79)

Cv in-out/out-exh (22 Series, 1/4): 2 / 1.2
Cv in-out/out-exh (22 Series, 3/8): 2.87 / 1.38
Cv in-out/out-exh (22 Series, 1/2): 3.62 / 1.32
Cv in-out/out-exh (32 Series, 1/2): 5.24 / 3.01
Cv in-out/out-exh (32 Series, 3/4): 6.47 / 3.14
Body material: Aluminum
Wattage & Amperage:
110V AC: 1.42 watts / .022 amps
230V AC: 2.0 watts / .016 amps
24V AC: 2.0 watts / 0.011 amps
24V DC:2.0 watts / 0.08 amps

How to Order

S 32 E - 04 BFGLM

Model:
S = Solenoid Quick Exhaust

Series:
22
32

Style:
E = Standard Solenoid Quick Exhaust Valve

Threads:
- = NPTF
G = G tap (BSPP)
R = PT (BSPT)

Port Size:
02 = 1/4 (22 only)
03 = 3/8 (22 only)
04 = 1/2 (22/32)
06 = 3/4 (32 only)

Options (see pg 101):
B = standard solenoid
E = 110V AC 50/60 Hz
F = 230V AC 50/60 Hz
J = 24V AC 50/60 Hz coil
K = 24V DC coil
L = plug with light
P = standard black plug ass'y
M = muffler
N = no manual override
G = gauge

NOTE: *All BSPP (G tap) and BSPT (R tap) models use BSPT gauge threads*

NEED MORE PARTS AND INFORMATION?

- **See page 119 for information on ordering replacement filters, bowls, etc.**
- **See page 101 for more information on available options.**

ORDER ONLINE

Product Cross Section

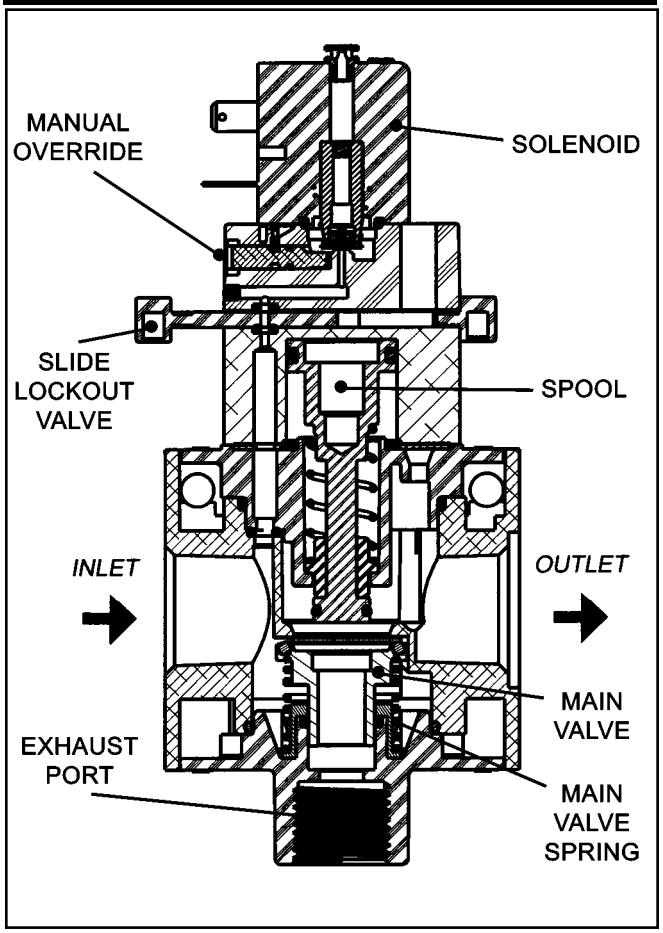

Notes

Disassembly We do not recommend the disassembly of the Solenoid Quick Exhaust outside of the factory except by trained, qualified individuals. There are no serviceable components inside the unit.

Maintenance The only serviceable components are located outside of the unit; the muffler (if equipped), the solenoid, and the plug. These components may be replaced if necessary (Please see the 'Options and Accessories' and 'Service Kits' sections on pages 93 and 107, respectively).

Dimensions

Dimensions in inches (millimeters in parenthesis)

22 Series Solenoid Quick Exhaust

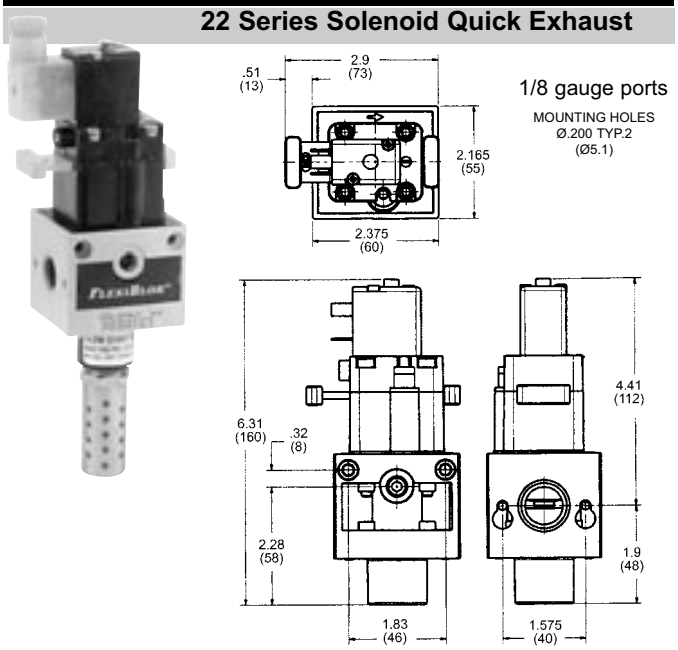

32 Series Solenoid Quick Exhaust

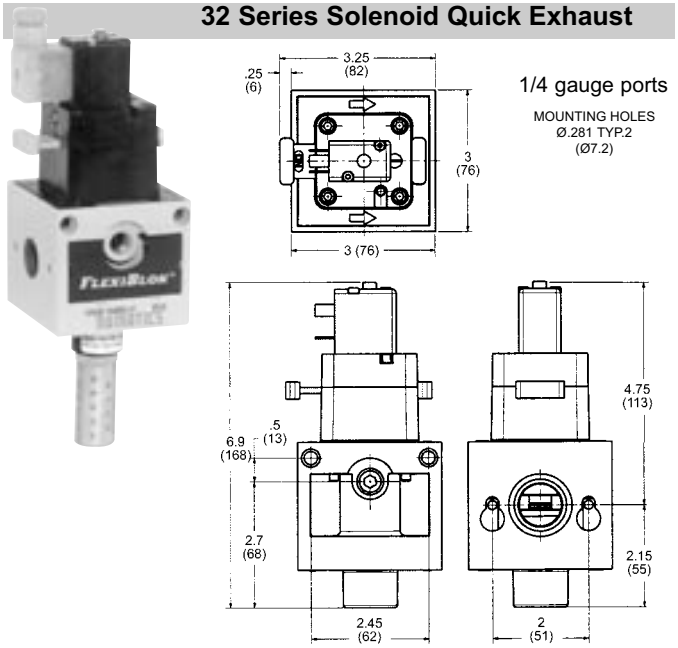

Flow Rates

S22E-04B (22 Series Solenoid Soft Start Quick Exhaust Valve)

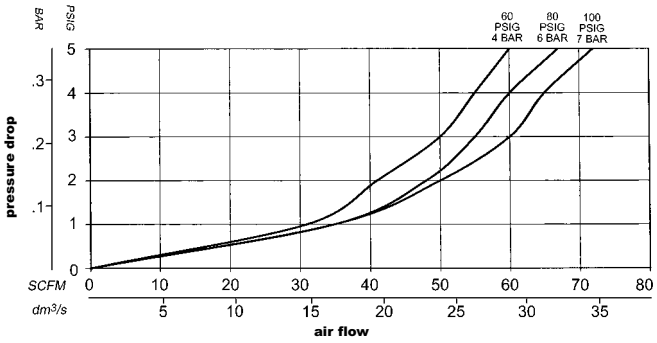

S32E-06B (32 Series Solenoid Soft Start Quick Exhaust Valve)

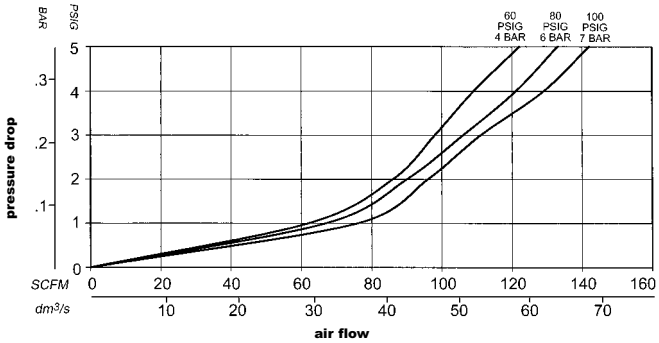

ORDER ONLINE

SHUT-OFF VALVE VS14, VS22, VS32 Series

ANSI SYMBOL

The FLEXIBLOK® Shut-Off Valve is an easy and inexpensive way to add shut off capability to an FRL. The valve includes a lockout feature designed for a padlock to prevent unauthorized downstream pressurization during maintenance. The shut off valve is usually mounted first in the assembly.
Max. inlet pressure: 200 PSI (13.7 bar)

- Relieves downstream pressure when closed
- Lockout feature prevents unauthorized pressurization of system
- Easy modular connection
- Can be used as individual component

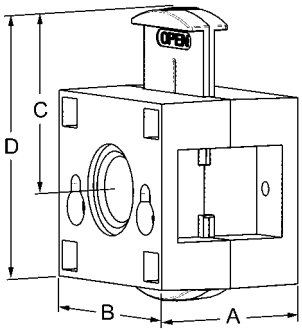

	Model #s			Dimensions				
	NPTF	BSPP	BSPT	A	B	C	D	Ports
12	VS14-01	VS14G01	VS14R01	1.63 (41)	1.6 (41)	1.6 (41)	3 (76)	1/8
	VS14-02	VS14G02	VS14R02	1.63 (41)	1.6 (41)	1.6 (41)	3 (76)	1/4
22	VS22-02	VS22G02	VS22R02	2.0 (50)	2.16 (55)	1.86 (47)	3.1 (79)	1/4
	VS22-03	VS22G03	VS22R03	2.0 (50)	2.16 (55)	1.86 (47)	3.1 (79)	3/8
	VS22-04	VS22G04	VS22R04	2.0 (50)	2.16 (55)	1.86 (47)	3.1 (79)	1/2
32	VS32-04	VS32G04	VS32R04	2.25 (57)	3.0 (76)	2.57 (65)	4.2 (107)	1/2
	VS32-06	VS32G06	VS32R06	2.25 (57)	3.0 (76)	2.57 (65)	4.2 (107)	3/4

NOTE: Add "N" to end of model number for non-relieving model (i.e. VS14-01***N***)

DIVERTER BLOCK DK14, DK22, DK32 Series

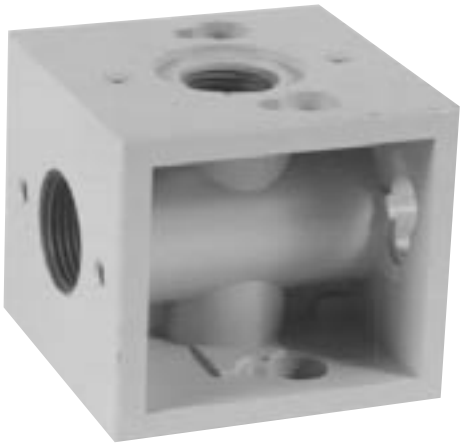

Designed to give FLEXIBLOK® components total versatility, the diverter block mounts directly inline with the FRL combination. Additional components can then be manifold mounted in a compact manner that doesn't cause excessive pressure drop. There are two available ports per unit; both are tapped for standard service.

Max. inlet pressure: 200 PSI (13.7 bar)

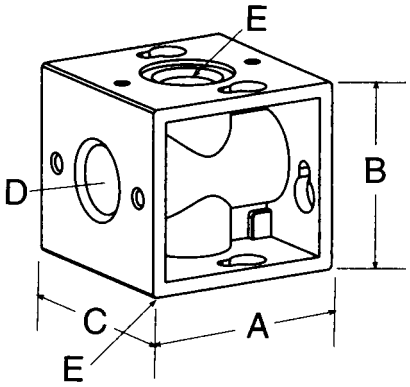

Series	Model #			Dimensions					Ports
	NPTF	BSPP	BSPT	A	B	C	D	E	
12	DK14-02	DK14G02	DK14R02	1.72 (44)	1.54 (39)	1.6 (41)	1/4	1/8	Tapped 1/4 NPTF In & Out with two 1/8 NPTF branches
22	DK22-03	DK22G03	DK22R03	2.165 (55)	2.00 (50)	2.165 (55)	1/2	3/8	Tapped 1/2 NPTF in & out with two 3/8 NPTF branches
32	DK32-04	DK32G04	DK32R04	3.00 (76)	2.70 (69)	3.00 (76)	3/4	1/2	Tapped 3/4 NPTF in & out with two 1/2 NPTF branches

ORDER ONLINE

DIVERTER PLATES HK14, HK22, HK32 Series

Diverter plates are designed to provide air signals in a compact space. Used individually or in combination, they can be used with gauges or switches to determine a pressure or Δ pressure signal.

Max. inlet pressure: 200 PSI (13.7 bar)

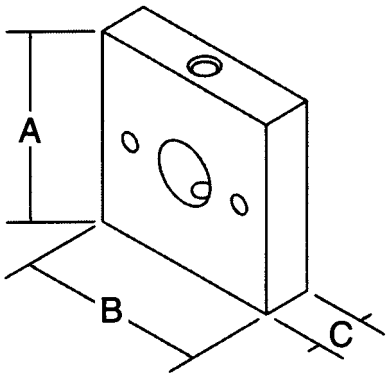

Series	Model #			Dimensions			Outlet	Application
	NPTF	BSPP	BSPT	A	B	C	Port	
14	HK14-01	HK14G01	HK14R01	1.54 (39)	1.50 (38)	.75 (19)	1/8	Mounts between two units
22	HK22-01	HK22G01	HK22R01	2.00 (51)	2.00 (51)	.75 (19)	1/8	Mounts between two units
32	HK32-01	HK32G01	HK32R01	3.00 (76)	3.00 (76)	.75 (19)	1/8	Mounts between two units

REAR-PORTED END PLATES MR32 Series

Available only in the 32 Series, the Rear-Ported End Plate allows an FRL to be mounted flush with a surface and the piping to exit the rear of the combination.

Max. inlet pressure: 200 PSI (13.7 bar)

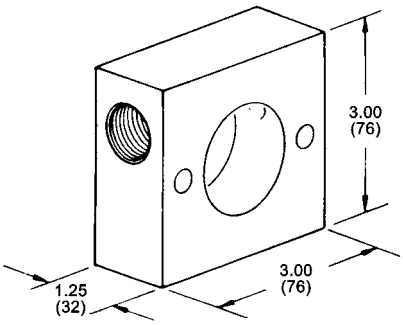

Series	Model Number	Style	NPTF	Description
32	MR32A	A	1/2	Left rear porting
32	MR32B	B	1/2	Right side rear porting
32	MR32AB	A/B	1/2	Both rear ported plates

ORDER ONLINE

ORDER ONLINE

Notes

ORDER ONLINE