M-9732 | 6

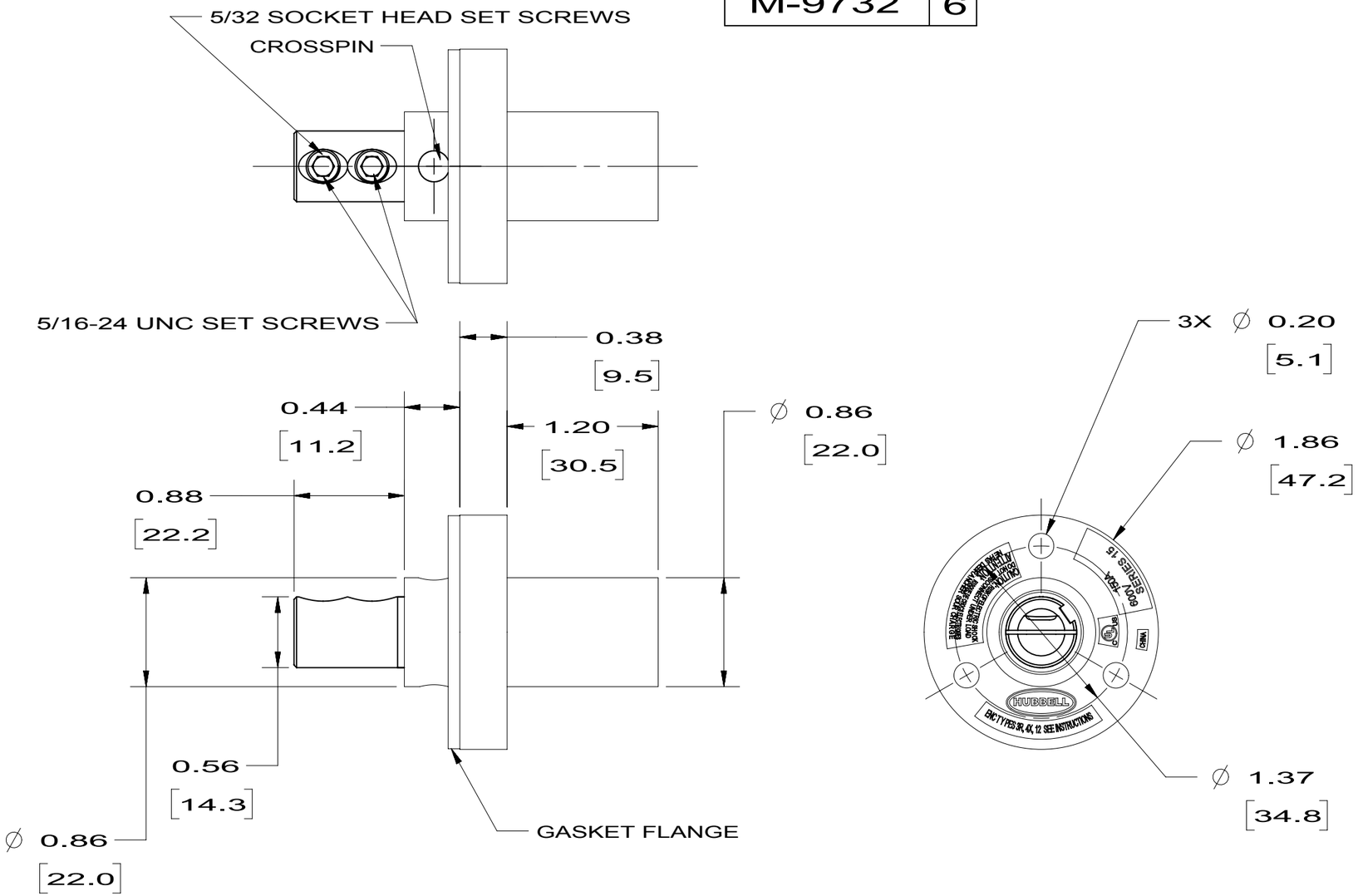


NOTES:

1. DIMENSIONS ARE INCHES ± .02
   [mm] ± .5
2. RATING: 600V 150 AMP SERIES 15.
3. UL/c-UL ENCLOSURE TYPES 3R, 4X, 12,

| HUBBELL CAT. NO. | COLOR |
|---|---|
| HBL15MRBK | BLACK |
| HBL15MRW | WHITE |
| HBL15MRGN | GREEN |
| HBL15MRR | RED |
| HBL15MRBL | BLUE |
| HBL15MRBN | BROWN |
| HBL15MRO | ORANGE |
| HBL15MRY | YELLOW |

LIST OF PARTS

| DESCRIPTION | MATERIAL | FINISH |
|---|---|---|
| HOUSING | PBT | SEE TABLE |
| CONTACT MALE | BRASS | |
| SET SCREWS | STEEL | NICKEL PL |
| CROSS PIN | PBT | |
| GASKET FLANGE | NEOPRENE | |

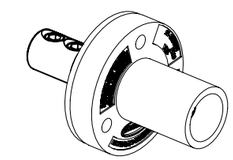

CATALOG NO: HBL15MRBK
(NOT SHOWN TO SCALE)

| SYM | REVISIONS | APP | DATE |
|---|---|---|---|
| 6 | REVISED NOTE 2 FROM 600VAC/250VDC TO 600V PER DCN 23410 RGP | RGP | 11/01/17 |
| 5 | IN TABLE, ADDED CATALOG NUMBERS; HBL15MRBN, HBL15MRO AND HBL15MRY AND SPECS. PER DCN 21990 DDL | DJP | 03/23/16 |
| 4 | REDRAWN WITH EMBEDDED CAD MODEL WITH NO CHANGES TO PART GEOMETRY. PER DCN 21895 SPN | DJP | 02/05/16 |
| 3 | ADDED GASKET FLANGE TO VIEWS AND CALLOUT. ADDED GASKET FLANGE AND MATERIAL SPEC TO LIST OF PARTS TABLE. PER DCN 19721 DDL | CAC | 03/27/13 |
| 2 | REDESIGNED PER DCN 19117 | CAC | 09/30/12 |
| 1 | RELEASE PER DCN 12733 PJT | TB | 12/19/05 |

THE DESIGN AND DIMENSIONS OF THE PRODUCT SHOWN ON THIS DRAWING ARE SUBJECT TO CHANGE WITHOUT NOTICE

TITLE

150A SINGLE POLE MALE RECEPTACLE WITH DOUBLE SET SCREW

TOLERANCES UNLESS OTHERWISE SPECIFIED
.XX = ± .01
.XXX = ± .005
ANGLES = ± 2°

WIRING DEVICE-KELLEMS
HUBBELL INCORPORATED
SHELTON, CT

| | | | |
|---|---|---|---|
| DR. BY | PJT | APP. BY | |
| TR. BY | | SCALE | 1:1 |
| CHK. BY | | DATE | 12/19/05 |

DIMENSION SHEET FOR CAT. NO. SEE TABLE

REPAIRABLE ☐ NON-REPAIRABLE ☒

B

M-9732

6

CODE 74545