M-9730 | 6

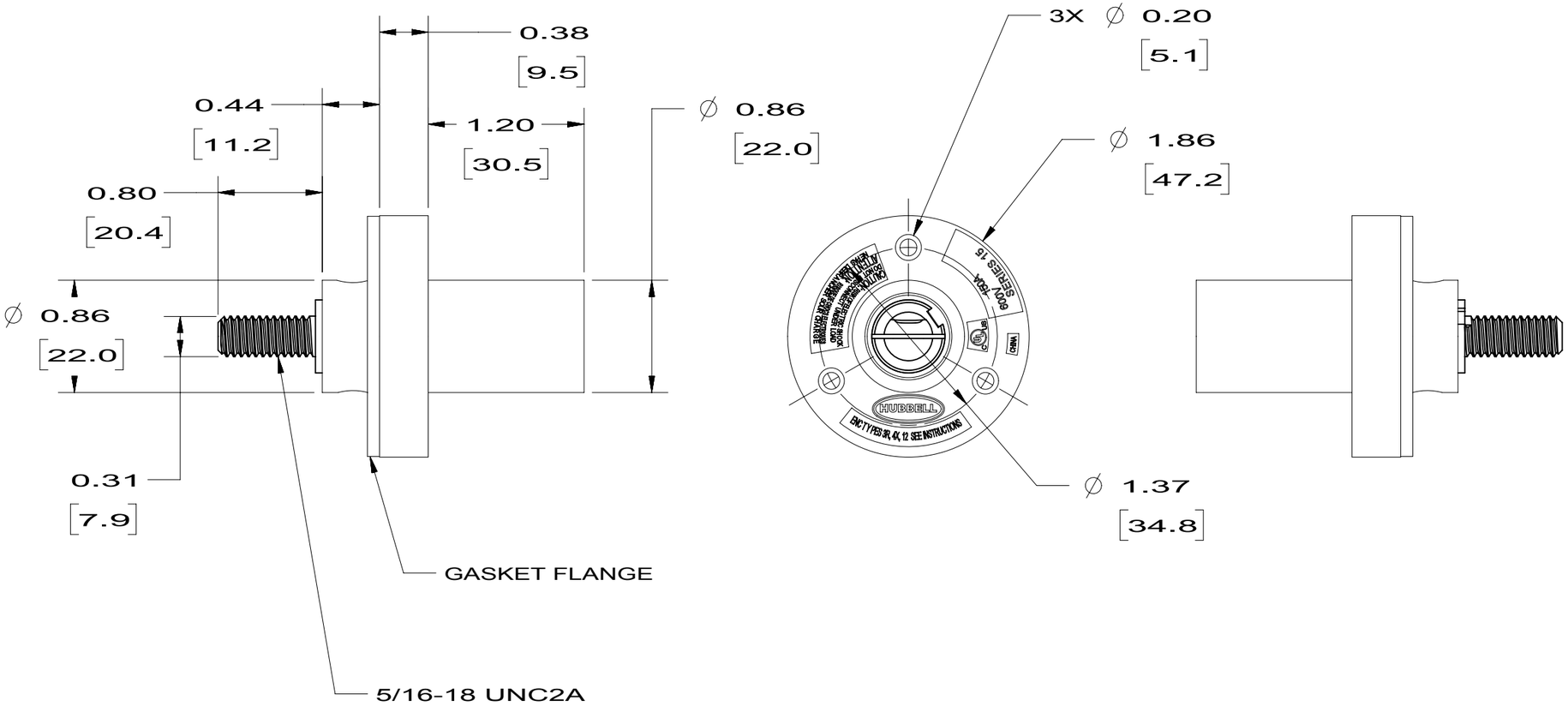

NOTES:

1. DIMENSIONS ARE INCHES ± .02
   [mm] ± .5
2. RATING: 600V 150 AMP SERIES 15.
3. UL/c-UL ENCLOSURE TYPES 3R, 4X, 12,

HUBBELL CAT. NO.	COLOR
HBL15MRSBK	BLACK
HBL15MRSW	WHITE
HBL15MRSGN	GREEN
HBL15MRSR	RED
HBL15MRSBL	BLUE
HBL15MRSBN	BROWN
HBL15MRSO	ORANGE
HBLMRSY	YELLOW

LIST OF PARTS

DESCRIPTION	MATERIAL	FINISH
HOUSING	PBT	SEE TABLE
CONTACT MALE	BRASS	
CROSS PIN	PBT	
GASKET FLANGE	NEOPRENE	

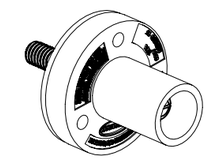

CATALOG NO: HBL15MRSBK
(NOT SHOWN TO SCALE)

SYM	REVISIONS	APP	DATE
6	REVISED NOTE 2 FROM 600VAC/250VDC TO 600V PER DCN 23410 RGP	RGP	11/01/17
5	IN TABLE, ADDED CATALOG NUMBERS; HBL15MRSBN, HBL15MRSO AND HBL15MRSY AND SPECS. PER DCN 21990 DDL	DJP	03/23/16
4	REDRAWN WITH EMBEDDED CAD MODEL WITH NO CHANGES TO PART GEOMETRY. PER DCN 21895 SPN	DJP	02/05/16
3	ADDED GASKET FLANGE TO VIEWS AND CALLOUT. ADDED GASKET FLANGE AND MATERIAL SPEC TO LIST OF PARTS TABLE. PER DCN 19721 DDL	CAC	03/27/13
2	REDESIGNED PER DCN#19117	CAC	09/30/12
1	RELEASED PER DCN#12733	TB	12/19/05

THE DESIGN AND DIMENSIONS OF THE PRODUCT SHOWN ON THIS DRAWING ARE SUBJECT TO CHANGE WITHOUT NOTICE

TITLE
SINGLE POLE MALE RECEPTACLE W/STUD

TOLERANCES UNLESS OTHERWISE SPECIFIED
.XX = ± .01
.XXX = ± .005
ANGLES = ± 2°

WIRING DEVICE-KELLEMS
HUBBELL INCORPORATED
SHELTON, CT

DR. BY	PJT	APP. BY	
TR. BY		SCALE	1:1
CHK. BY		DATE	12/19/05

DIMENSION SHEET FOR CAT. NO.
SEE TABLE

REPAIRABLE ☐
NON-REPAIRABLE ☒

B

M-9730

6

CODE 74545