M-12936 | 1

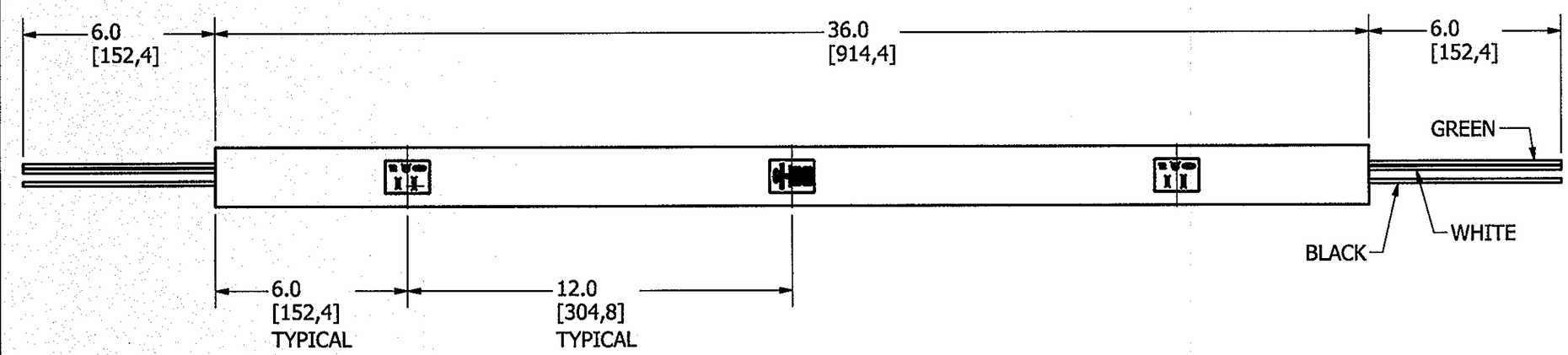

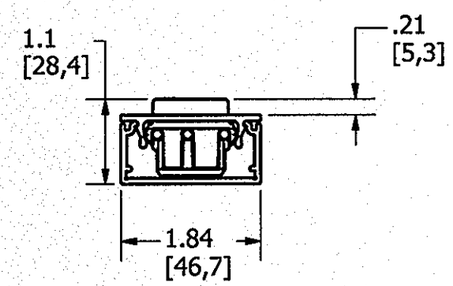

END VIEW

NOTES:
1) RECEPTACLES & USB ARE LOCATED SYMMETRICALLY IN OVERALL LENGTH.
2) CONDUCTORS - #12 THHN STRANDED WIRE.
3) DEVICE COLOR - GRAY.

CATALOG NUMBER	CONFIGURATION	NO. OF RECEPTACLES	NO. OF USB
HBLALU20GB312U	15AMP PER NEMA 5-15R	2	1 (2.4A 5V)

ALL DIMENSIONS ARE IN INCHES AND [MILLIMETERS]

LIST OF PARTS

DESCRIPTION	MATERIAL	FINISH
RACEWAY	STEEL	SEE NOTES
RECEPTACLES	THERMOPLASTIC	SEE NOTES
CONTACTS	COPPER ALLOY	NONE
USB	THERMOPLASTIC	SEE NOTES

DIMENSION SHEET FOR CAT. NO.
SEE TABLE

REPAIRABLE ☐
NON-REPAIRABLE ☒

SYM	DESCRIPTION	APPROVED	DATE
1	RELEASED PER DCN21035	AD	2/10/2015

THE DESIGN AND DIMENSIONS OF THE PRODUCT SHOWN ON THIS DRAWING ARE SUBJECT TO CHANGE WITHOUT NOTICE

TITLE
PLUGTRAK - ALUMINUM RACEWAY
TAMPER RESISTANT/USB
MULTI-OUTLET ASSEMBLIES

TOLERANCES UNLESS OTHERWISE SPECIFIED
FRACTIONS ±1/64
DECIMALS ±.005
ANGLES ±2°

WIRING DEVICE-KELLEMS
HUBBELL INCORPORATED
SHELTON, CT

DR. BY	AD	APP. BY	SM
TR. BY		SCALE	NONE
CHK'D BY	SM	DATE	2/6/2015

B
M-12936
1

CODE 74545