M-13368 | 1

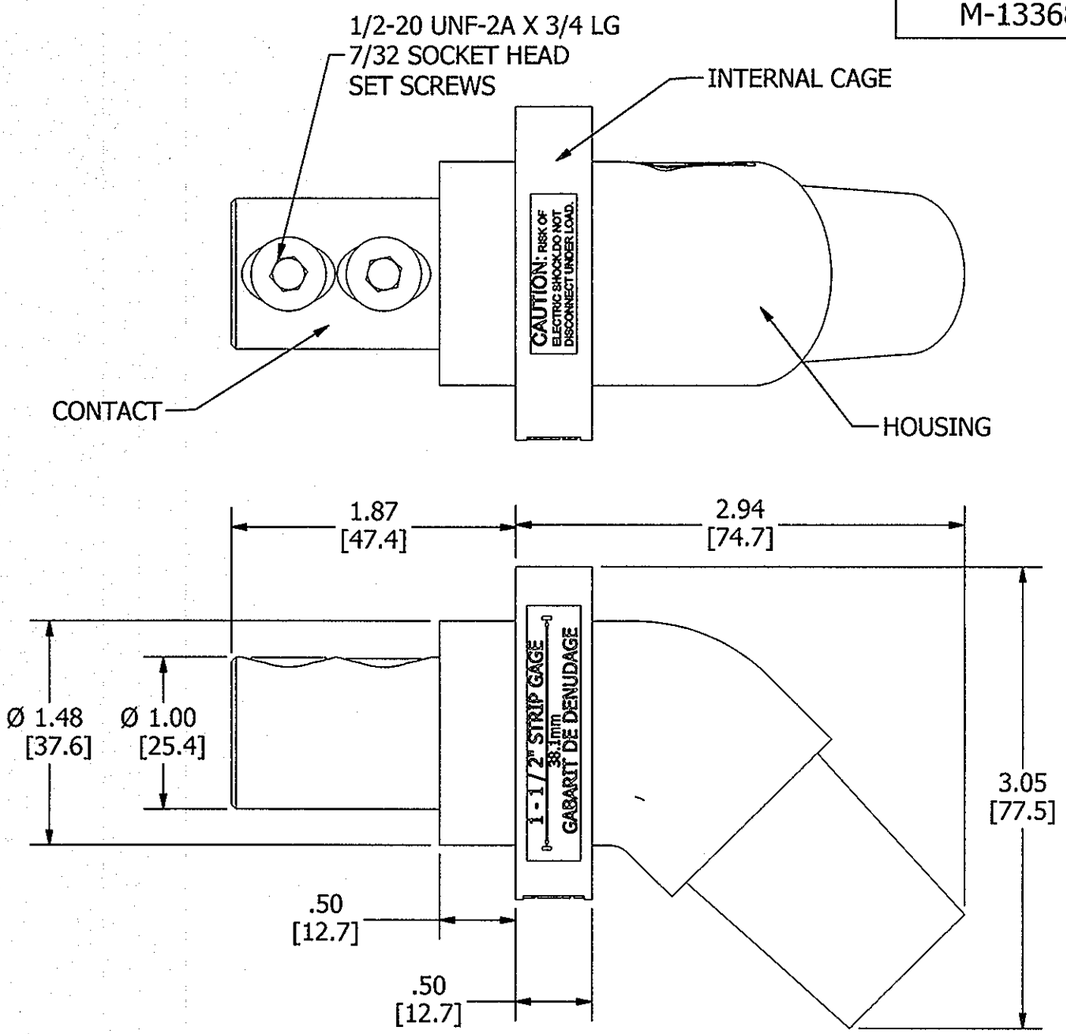

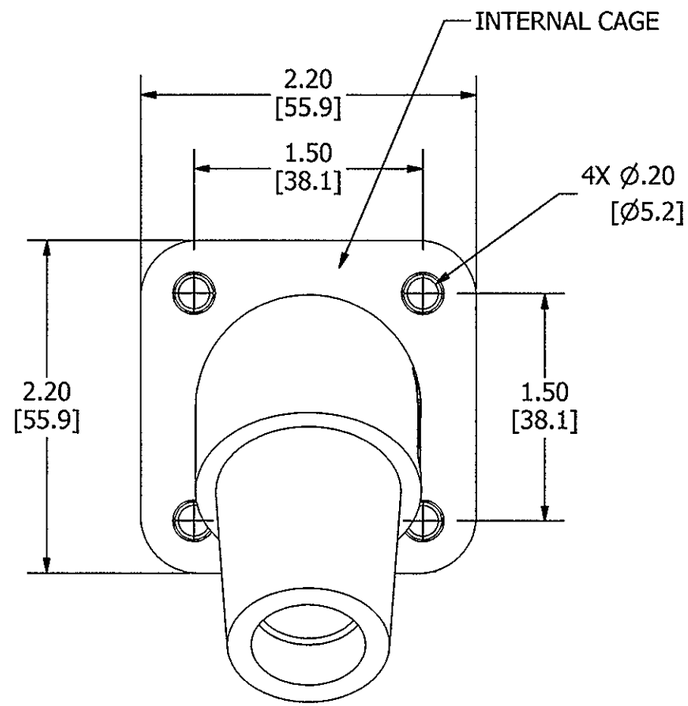

LIST OF PARTS		
DESCRIPTION	MATERIAL	FINISH
HOUSING	TPE	SEE TABLE
CONTACT	BRASS	
INTERNAL CAGE	NYLON	
SET SCREW	STEEL	NICKEL
STRAIN RELIEF WIRE	COPPER	
COPPER SHEET	COPPER	

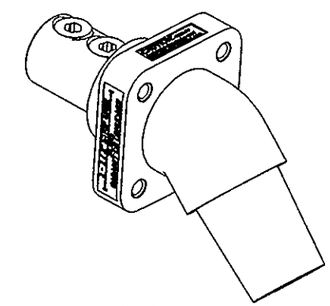

1/2 SCALE SHOWN

NOTES:

1. DIMENSIONS ARE IN INCHES ±.02 [mm] ±.5
2. RATING: 600VAC/250VDC, 400 AMP.
3. UL/c-ul ENCLOSURE TYPES 3R, 4X, 12, SEE INSTRUCTION SHEET.
4. CABLE SIZE #4 AWG - 4/0, COPPER ONLY.
5. STRAIN RELIEF WIRE & COPPER SHEET NOT SHOWN.

HUBBELL CAT. NO	COLOR
HBLFRABK	BLACK
HBLFRABL	BLUE
HBLFRABN	BROWN
HBFRAGN	GREEN
HBLFRAO	ORANGE
HBLFRAR	RED
HBLFRAW	WHITE
HBLFRAY	YELLOW

SYM	DESCRIPTION	APPROVED	DATE
1	RELEASED PER DCN# 22075 CAC	CAC TLS	04/28/16

THE DESIGN AND DIMENSIONS OF THE PRODUCT SHOWN ON THIS DRAWING ARE SUBJECT TO CHANGE WITHOUT NOTICE

TITLE
SINGLE POLE
ANGLED FEMALE RECEPTACLE
W/DOUBLE SET SCREW

TOLERANCES UNLESS OTHERWISE SPECIFIED
FRACTIONS ± 1/64
DECIMALS ± .030
ANGLES ± 2°

WIRING DEVICE-KELLEMS
HUBBELL INCORPORATED
SHELTON, CT

DR. BY	CAC	APP. BY	TLS
TR. BY		SCALE	1:1
CHK'D BY	TLS	DATE	4/6/2016

DIMENSION SHEET FOR CAT. NO. SEE TABLE

REPAIRABLE ☐ NON-REPAIRABLE ☒

B M-13368 1

CODE 74545