M-8930 | 4

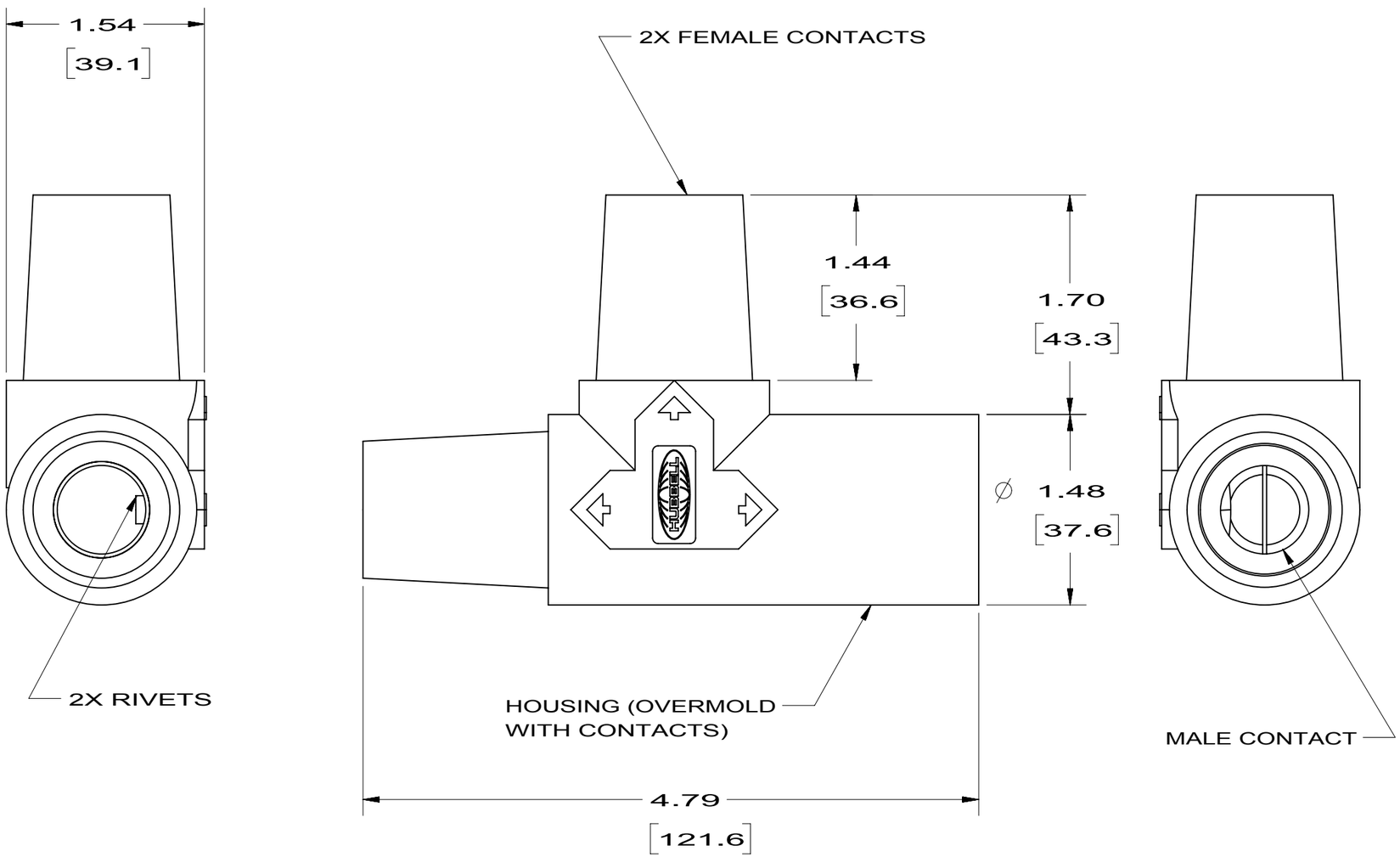

NOTES:
1. DIMENSIONS ARE INCHES ± .02
   [mm] ± .5
2. RATING: 600V 400 AMP
3. UL/c-UL ENCLOSURE TYPES 3R, 4X, 12,
   SEE INSTRUCTION SHEET

HUBBELL CAT. NO.	COLOR
HBLTBK	BLACK
HBLTW	WHITE
HBLTGN	GREEN
HBLTBR	RED
HBLTBL	BLUE
HBLTO	ORANGE
HBLTBN	BROWN
HBLTY	YELLOW

LIST OF PARTS

DESCRIPTION	MATERIAL	FINISH
HOUSING	TPE	SEE TABLE
FEMALE CONTACT	BRASS	
RIVET	BRASS	
MALE CONTACT	BRASS	

SYM	REVISIONS	APP	DATE
4	REVISED NOTE 2 FROM 600VAC/250VDC TO 600V PER DCN 23410 RGP	RGP	11/01/17
3	UL FILE REVIEW UPDATE. CHANGE DIM. FROM 4.74 TO 4.79. CHANGED MARKINGS PER DCN 20659 CAC	CAC	08/15/14
2	REMOVE ∅ 1.06 [27.0] & ∅ 1.22 [30.9] ADD ± .02 & ± .5 TO NOTE 1 CHANGED NOTE 3 PER DCN 11484 TwB	TWB	12/15/04
1	RELEASED PER DCN 10992 MJM	TWB	6/25/03

THE DESIGN AND DIMENSIONS OF THE PRODUCT SHOWN ON THIS DRAWING ARE SUBJECT TO CHANGE WITHOUT NOTICE

TITLE SINGLE POLE TAPPING TEE FEMALE/ FEMALE/MALE

TOLERANCES UNLESS OTHERWISE SPECIFIED
FRACTIONS ± 1/64
DECIMALS ± .005
ANGLES ± 2°

WIRING DEVICE-KELLEMS
HUBBELL INCORPORATED
BRIDGEPORT, CT

DR. BY	MJM	APP. BY	TWB
TR. BY		SCALE	1:1
CHK'D BY	TWB	DATE	6/11/03

DIMENSION SHEET FOR CAT. NO. SEE TABLE

REPAIRABLE ☐ NON-REPAIRABLE ☒

B

M-8930

4

CODE 74545