M-10153 | 1

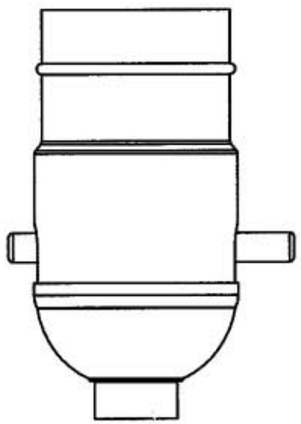

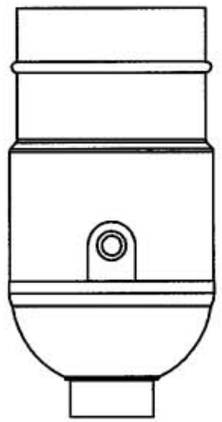

PRODUCT SPECIFICATIONS:

2 SCREW
660W - 250VAC LAMPHOLDER
1/8" IPS THREAD ED BUSHING WITH SET SCREW

cUL LISTED

CODE 74545

LIST OF PARTS

DESCRIPTION	MATERIAL	FINISH
LAMPHOLDER BASE	BRASS	
SCREW	STEEL	

SYM	REVISIONS	APP	DATE
1	08/21/06 RELEASED TO PRODUCTION PER DCN# 13353	RDK	08/21/06

THE DESIGN AND DIMENSIONS OF THE PRODUCT SHOWN ON THIS DRAWING ARE SUBJECT TO CHANGE WITHOUT NOTICE

TITLE
MEDIUM BASE LAMPHOLDER - PUSH THRU, SINGLE CIRCUIT

TOLERANCES UNLESS OTHERWISE SPECIFIED
FRACTIONS ±1/64
DECIMALS ±.005
ANGLES ±2°

HUBBELL WIRING SYSTEMS
BRIDGEPORT, CT

DR. BY AMZ | APP. BY RDK
TR. BY | SCALE NONE
CHK'D BY RDK | DATE 05/11/06

DIMENSION SHEET FOR CAT. NO. RL105

REPAIRABLE ☐ NON-REPAIRABLE ☒

B

M-10153

1