M13270 | 2

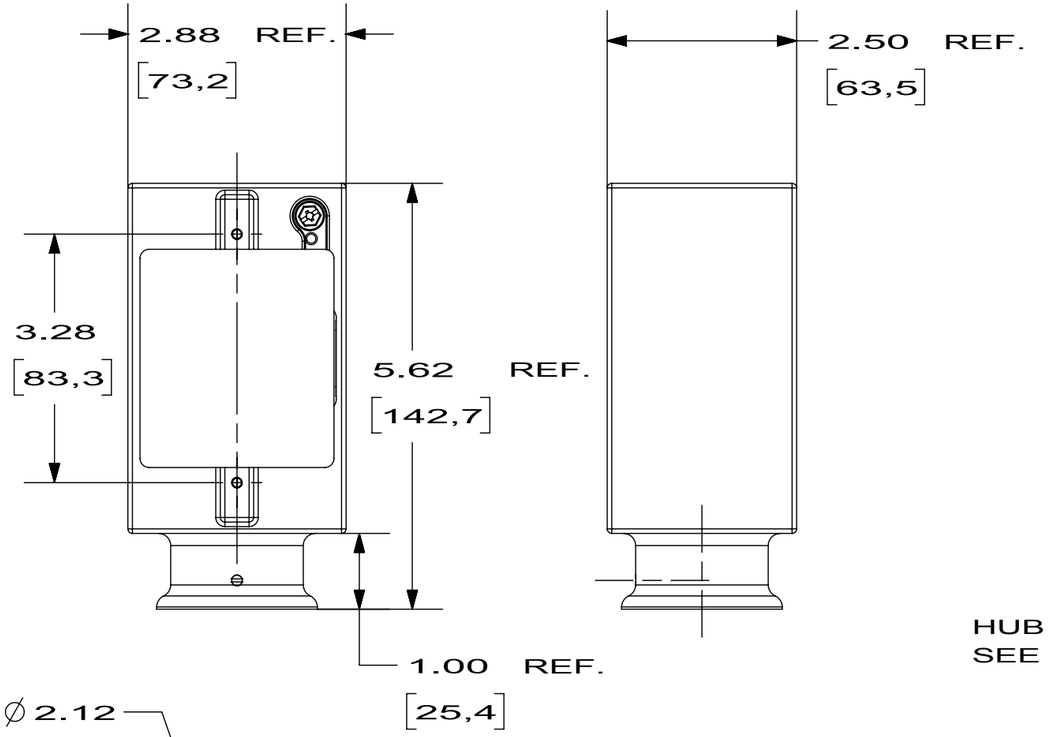

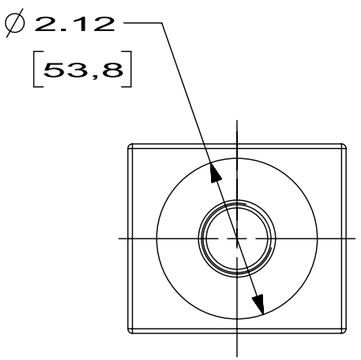

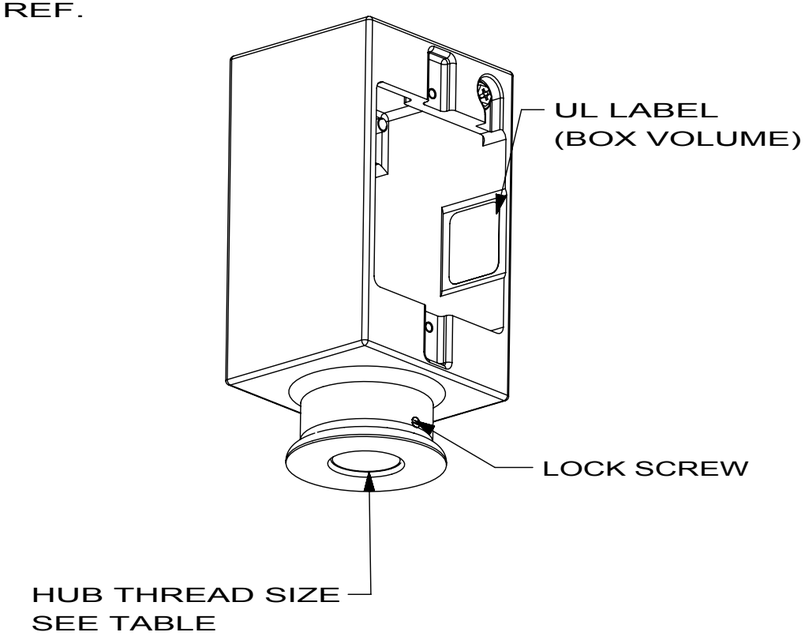

NOTE:
1. ALL DIMENSIONS ARE IN INCH [mm].
2. DEVICE PLATES CAT.# (NOT INCLUDED):
   SS8, SS26, SS7, SS720, SS13
   CAN BE USED WITH THE PEDESTAL BOX.

CAT.#	HUB THREAD SIZE	DESCRIPTION
SA6686G	1" - 11.5 N.P.S.M	PEDESTAL BOX, 2-GANG (FRONT AND BACK)
SA6685G	3/4" - 14 N.P.S.M	

LIST OF PARTS

DESCRIPTION	MATERIAL	FINISH
PEDESTAL BOX	ALUMINUM	BRUSH & LACQUER FINISH
GROUND SCREW	BRASS	GREEN FINISH
LOCK SCREW	STEEL	Zn PLATE

SYM	REVISIONS	APP	DATE
2	CAT #'s SA6686G & SA6685G WAS SA6686 & SA6685 PER DCN 23658 RM	DDL	4/11/18
1	NEW RELEASE PER DCN #21901	DL	2/1/16

THE DESIGN AND DIMENSIONS OF THE PRODUCT SHOWN ON THIS DRAWING ARE SUBJECT TO CHANGE WITHOUT NOTICE

TITLE
PEDESTAL BOX, 2 GANG

TOLERANCES UNLESS OTHERWISE SPECIFIED
.XX = ± .01
.XXX = ± .005
ANGLES = ± 2°

WIRING DEVICE-KELLEMS
HUBBELL INCORPORATED
SHELTON, CT

DR. BY D.LI | APP. BY
TR. BY | SCALE 1:2
CHK. BY | DATE 2/1/16

DIMENSION SHEET FOR CAT. NO. SEE TABLE

REPAIRABLE ☐ NON-REPAIRABLE ☒

B

M-13270

2

CODE 74545