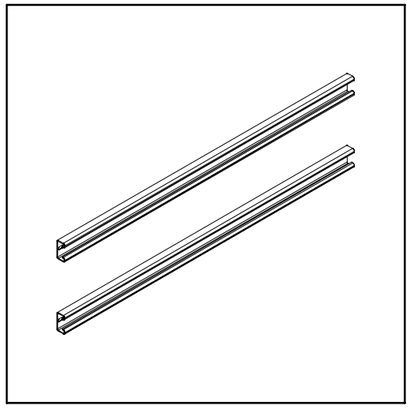

Hoffman®
A Pentair Company

PROLINE®

Mounting Channel
La Manche De Support
Canal Del Montaje

1	2	3 M6	4 M5x10	5 M6	6 M6x16
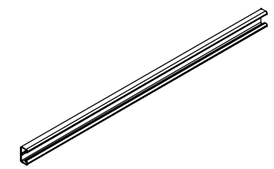	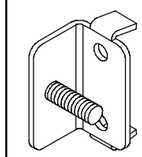		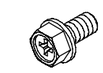	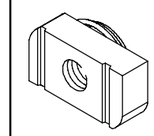	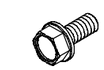
(2x)	(4x)	(4x)	(4x)	(4x)	(4x)

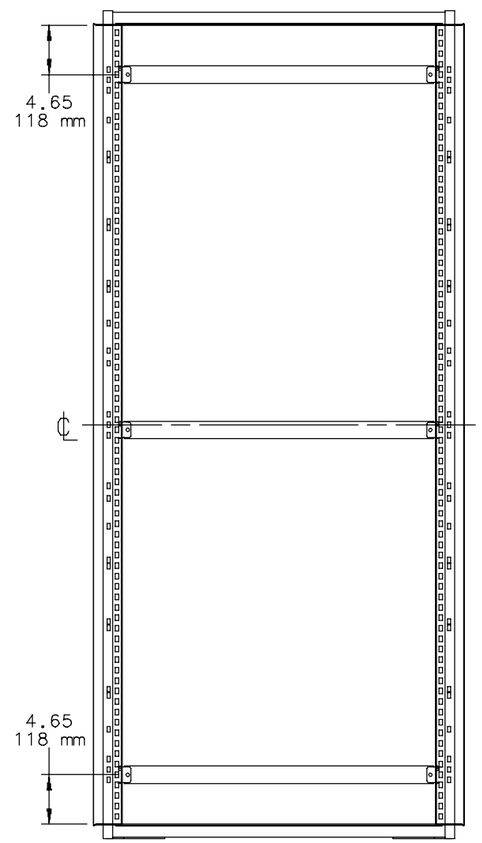

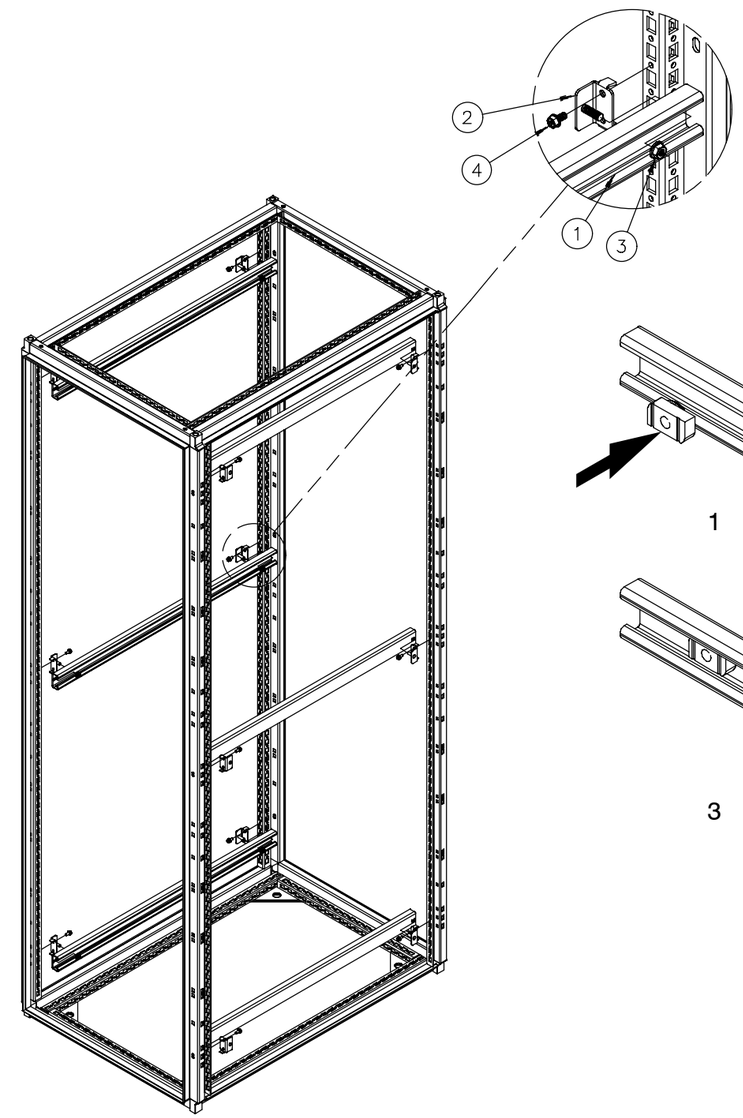

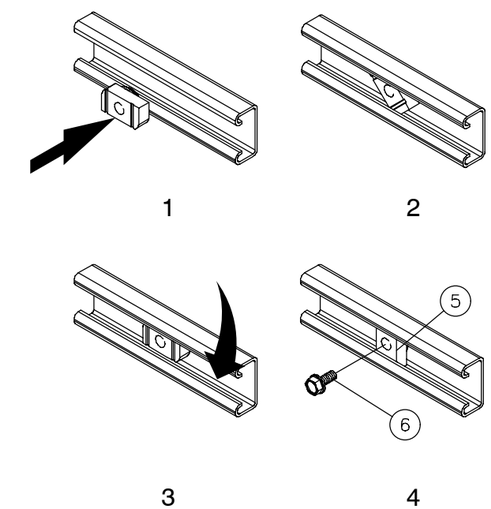

Clamping Nut
Ecrou Ee Serrage
Arandela De Ajuste

Hoffman Enclosures Inc.
2100 Hoffman Way
Anoka, MN 55303–1745
(763) 422–2211
www.hoffmanonline.com

Pentair Electronic Packaging
170 Commerce Drive
Warwick, RI 02886
(401) 732–3770
www.pentair–ep.com

Mexico
Pentair Enclosures, S. de R.L. de C.V.
Federico T. de la Chica No. 8 Piso 4 A
Circuito Comercial Plaza Satélite
Ciudad Satélite,
Naucalpan, México C.P. 53100
011–52–55–5393–8263

Canada
Hoffman–Schroff
111 Grangeway Avenue, Suite 504
Scarborough, Ontario M1H 3E9
(416) 289–2770
1–800–668–2500 (Canada only)

Germany
Schroff GmbH
Langenalber Str. 96–100
75334 Straubenhardt
49 (07082) 794–0 www.schroff.de

Great Britain
Schroff UK Ltd.
Maylands Avenue
Hemel Hempstead, Herts HP2 7DE
44 (01442) 240471 www.schroff.co.uk

Sweden
Schroff Scandinavia AB
Box 2003
12821 Skarpnäck
46 08683 61 00 www.schroff.se

France
Schroff Sas
Z.I., 4 rue du Marais
67660 Betschdorf
33 03 88 90 64 90 www.schroff.fr

Italy
Schroff srl
Viale Milano, 119
21013 Gallarate (Varese)
39 0331 79 40 03

Singapore
Hoffman–Schroff Pte. Ltd.
#01–68/71 German Centre
25 International Business Park
Singapore 609916
65 5 62–78 90

Japan
Schroff K.K.
Nisso No. 13 Bldg. 4F
2–5–1 Shinyokohama
Kohoku–Ku, Yokohama shi
Kanagawa 222–0033
81 (045) 476–02 81

Finland
Schroff Scandinavia AB
Peräsimentie 8
03100 Nummela
358 09 222 68 00

Norway
Schroff Scandinavia AB
Bjoernerudveien 24
1266 Oslo
47 022 76 33 60

© 2005 Hoffman Enclosures Inc.