OPERATOR ADAPTER WAMT

Installation Instructions for Westinghouse Type AMT Below-Handle Mechanisms for Disconnect Switches and Circuit Breakers, and Flex Shaft Handle Mechanisms for Circuit Breakers

(For parts list, see Page 2)

For floor-mounted enclosures with the disconnect on the right flange

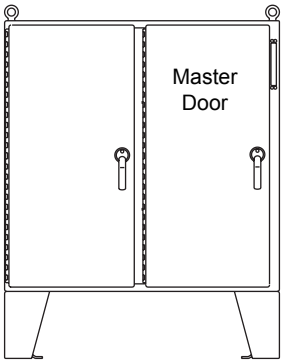

For one- through six-door free-standing enclosures with the disconnect the the right flange

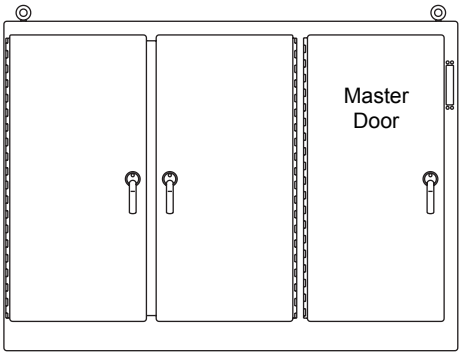

For floor-mounted enclosures with the disconnect on the centerpost

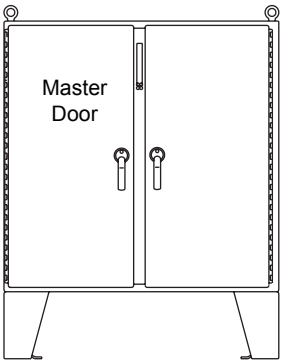

© 2018 Hoffman Enclosures Inc.

⚠ WARNING

The functions, fits and clearances of the installation described hereon are calculated from information supplied by the manufacturers of the equipment to be installed. Be certain to check the function, fits and clearances of all equipment both before and after installation to assure that it operates properly and safely and meets all applicable codes, standards and regulations.

In the event the completed installation does not function properly or fails to meet any such codes, standards or regulations, do not attempt to make alterations or operate the equipment. Report such facts immediately to:

Hoffman Customer Service
2100 Hoffman Way
Anoka, MN 55303
763.422.2211
http://hoffman.nvent.com/contact-us

Parts List

Operator Adapter, Catalog Number WAMT, Westinghouse Type AMT Below-Handle Mechanisms and Flex Shaft Mechanisms

Item No.	Description	Part No.	Qty.
1	ADAPTER PLATE, WEST AMT.	26264001	1
2	PLATE GASKET	89109613	1
3	SCREW, 1/4-20X1/2 PAN HEAD	99401031	4
4	SLIDE ARM	26250001	1
5	SHOULDER COLLAR	26149001	1
6	SCREW, 1/4-20X7/8 HEX HEAD	99401030	1
7	LOCKWASHER, 1/4 SPRING	99401318	1
8	WASHER, FLAT	22101003	2
9	LOCKWASHER, 1/4 INTERNAL TEETH	99401300	2
10	NUT, 1/4-20 HEX	99401406	2
11	INTERLOCK BLADE	26199002	1
12	SCREW, 10-32X3/8 PAN HEAD	99401007	2
13	LOCKWASHER, #10 INTERNAL TEETH	99401307	2
14	SLIDE ARM (ALTERNATE)	26391001	1
15	NYLON WASHER	26132003	4
16	INSTALLATION INSTRUCTIONS	89114653	1

Notes:

1. Adapter plate to be used for all below-handle AMT mechanisms and for AMT Flex Shaft cable mechanism for F Frame circuit breakers.

2. Use slide arm (item 4) for all AMT below-handle mechanisms and AMT Flex Shaft cable mechanisms. Use slide arm (item 14) only for AMT Flex Shaft mechanisms for F Frame circuit breakers.

© 2018 Hoffman Enclosures Inc.

INTRODUCTION

This installation instruction is for Westinghouse Below–Handle AMT and Flex Shaft AMT cable mechanisms for F-Frame circuit breakers. These mechanisms are for disconnect switches and circuit breakers mounted in Hoffman two door, floor–mounted, enclosures with the disconnect on the right flange.

INSTALLATION STEPS

Step 1
Install adapter plate (item 1) and plate gasket (item 2) on the inside of the enclosure, behind the rectangular opening provided. Gasket side with PSA should be attached to adapter plate. Secure in place with four screws (item 3) and four nylon washers (item 15).

Step 2
Assemble the Westinghouse “AMTOP” operating handle to the mounting plate which was installed in the enclosure in step 1. Omit cap screw and lockwasher which fits into bottom hole of “AMTOP” operating handle.

Step 3
Install the slide arm (item 4 or 14) over the projecting part of the “AMTOP” operating handle as shown. Note that bottom holes in slide arm are not on center of slide arm. Place the smaller diameter end of the shoulder ollar (item 5) through the oval slot in the slide arm. Install long cap screw (item 6) with lockwasher (item 7) hrough shoulder collar into the bottom mounting hole of the “AMTOP” operating handle and tighten. The slide arm should move up and down smoothly. Install interlock lever extension per Westinghouse instructions.

Step 4
Attach the bottom of the slide arm (item 4 or 14) to the offset arm of the lock release mechanism. Use two flat washers (item 8), two lockwashers (item 9), and two hex nuts (item 10). Do not tighten until parts are adjusted (see step 5B)

Step 5
The handle safety lock release mechanism is adjustable in two places.

A) Check the adjustment of the factory installed roller bracket. The door latch should hit against the latch stop portion of the roller bracket when the door is closed and latched. Adjust up or down if necessary. The attached mechanism will then provide the necessary up–down motion required to operate the release mechanism in the “AMTOP” operating handle.

B) Adjust the length of the slide arm assembly. With proper adjustment of the slide arm, the safety lock (in “AMTOP” operating handle) should release just before the master door is fully latched. Lengthen slide arm if safety lock releases too soon. Shorten slide arm if safety lock releases too late.

Step 6
Attach the cover interblock blade (item 11), provided by Hoffman, to the tapped spacer on the door using the bottom set of mounting holes. Used the two screws (item 12) and lockwashers (item 13). The cover interlock blade prevents the door from being opened when the “AMTOP” operating handle is in the “ON” position. This blade may be adjusted up or down to hook properly on the interlock lever extension. The blade (item 11) must be positioned so the bottom edge of blade clears the interlock lever extension by 1/4 inch when “AMTOP” operating handle is in extreme “OFF” position.

Step 7
Drill and tap holes in panel for disconnect required per Westinghouse instructions. See Westinghouse instructions for location and size of mounting holes.

Step 8
Install panel in enclosure.

Step 9
Mount disconnect switch or circuit breaker on panel using Westinghouse instructions and parts.

© 2018 Hoffman Enclosures Inc.

For Two-Door, Floor-Mounted Enclosures with Disconnect on Right Flange

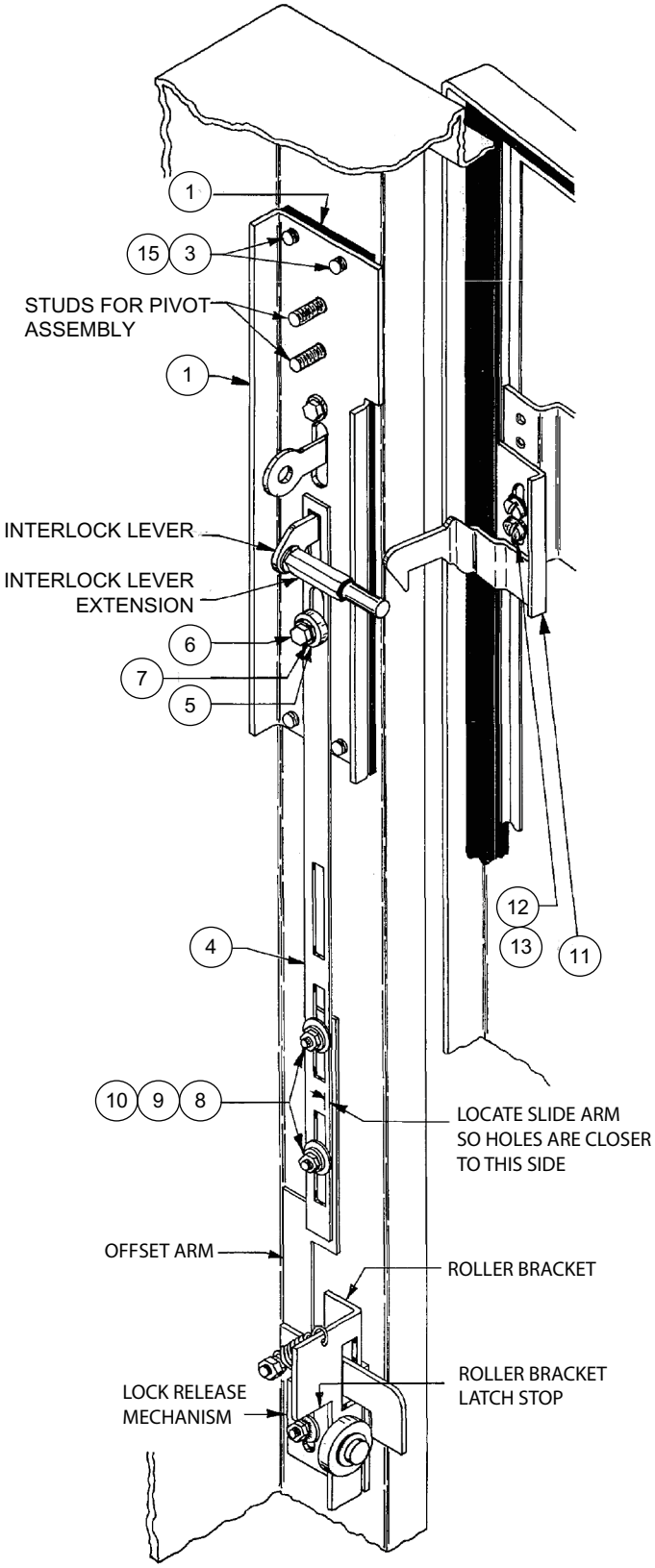

© 2018 Hoffman Enclosures Inc.

INTRODUCTION

This installation instruction is for Westinghouse Below–Handle AMT and Flex Shaft AMT cable mechanisms for F-Frame circuit breakers. These mechanisms are for disconnect switches and circuit breakers mounted in Hoffman one through six door, free–standing, enclosures with the disconnect on the right flange.

INSTALLATION STEPS

Step 1
Install adapter plate (item 1) and plate gasket (item 2) on the inside of the enclosure, behind the rectangular opening provided. Gasket side with PSA should be attached to the adapter plate. Secure in place with four screws (item 3) and four nylon washers (item 15).

Step 2
Assemble the Westinghouse “AMTOP” operating handle to the mounting plate which was installed in the enclosure in step 1. Omit cap screw and lockwasher which fits into bottom hole of “AMTOP” operating handle.

Step 3
Install the slide arm (item 4 or 14) over the projecting part of the “AMTOP” operating handle as shown. Note that bottom holes in slide arm are not on center of slide arm. Place the smaller diameter end of the shoulder collar (item 5) through the oval slot in the slide arm. Install long cap screw (item 6) with lockwasher (item 7) through shoulder collar into the bottom mounting hole of the “AMTOP” operating handle and tighten. The slide arm should move up and down smoothly. Install interlock lever extension per Westinghouse instructions.

Step 4
Attach the bottom of the slide arm (item 4 or 14) to the offset arm of the lock release mechanism. Use two flat washers (item 8), two lockwashers (item 9), and two hex nuts (item 10). Do not tighten until parts are adjusted (see step 5B)

Step 5
The handle safety lock release mechanism is adjustable in two places.

A) Check the adjustment of the factory installed roller bracket. The door latch should hit against the latch stop portion of the roller bracket when the door is closed and latched. Adjust up or down if necessary. The attached mechanism will then provide the necessary up–down motion required to operate the release mechanism in the “AMTOP” operating handle.

B) Adjust the length of the slide arm assembly. With proper adjustment of the slide arm, the safety lock (in “AMTOP” operating handle) should release just before the master door is fully latched. Lengthen slide arm if safety lock releases too soon. Shorten slide arm if safety lock releases too late.

Step 6
Attach the cover interblock blade (item 11), provided by Hoffman, to the tapped spacer on the door using the bottom set of mounting holes. Used the two screws (item 12) and lockwashers (item 13). The cover interlock blade prevents the door from being opened when the “AMTOP” operating handle is in the “ON” position. This blade may be adjusted up or down to hook properly on the interlock lever extension. The blade (item 11) must be positioned so the bottom edge of blade clears the interlock lever extension by 1/4 inch when “AMTOP” operating handle is in extreme “OFF” position.

Step 7
Drill and tap holes in panel for disconnect required per Westinghouse instructions. See Westinghouse instructions for location and size of mounting holes.

Step 8
Install panel in enclosure.

Step 9
Mount disconnect switch or circuit breaker on panel using Westinghouse instructions and parts.

© 2018 Hoffman Enclosures Inc.

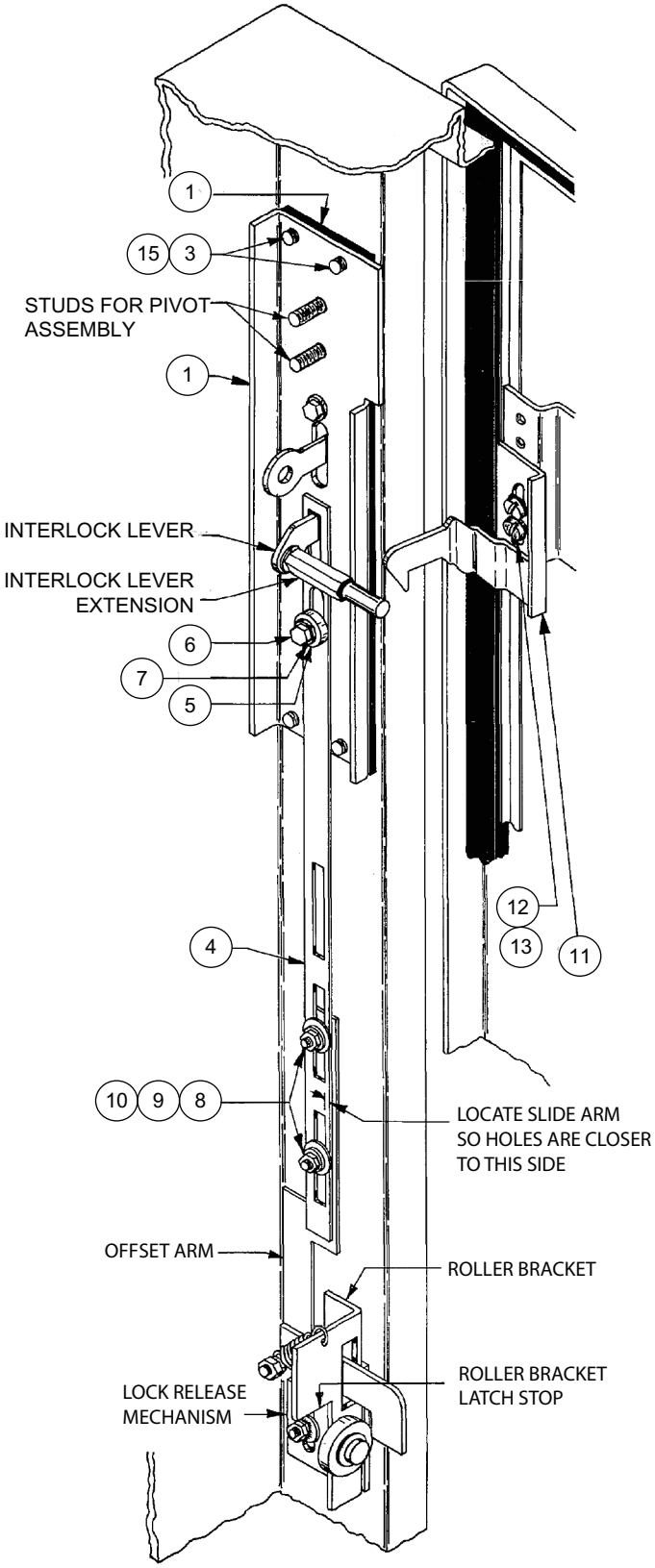

© 2018 Hoffman Enclosures Inc.

INTRODUCTION

This installation instruction is for Westinghouse Below-Handle AMT and Flex Shaft AMT cable mechanisms for F Frame circuit breakers. These mechanisms are for disconnect switches and circuit breakers mounted in Hoffman two door, floor–mounted, enclosures with the disconnect on the centerpost.

INSTALLATION STEPS

Step 1
Install adapter plate (item 1) and plate gasket (item 2) on the inside of the enclosure, behind the rectangular opening provided. Gasket side with PSA should be attached to the adapter plate. Secure in place with four screws (item 3) and four nylon washers (item 15).

Step 2
Assemble the Westinghouse “AMTOP” operating handle to the mounting plate which was installed in the enclosure in step 1. Omit cap screw and lockwasher which fits into bottom hole of “AMTOP” operating handle.

Step 3
Cut 2 1/2 inches off bottom end of slide arm (item 4 or 14). Bottom end of slide arm has rectangular holes only.

Step 4
Install the slide arm (item 4 or 15) over the projecting part of the “AMTOP” operating handle as shown. Note that bottom holes in slide arm are not on center of slide arm. Place the smaller diameter end of the shoulder collar (item 5) through the oval slot in the slide arm. Install long cap screw (item 6) with lockwasher (item 7) through shoulder collar into the bottom mounting hole of the “AMTOP” operating handle and tighten. The slide arm should move up and down smoothly. Install interlock lever extension per Westinghouse instructions.

Step 5
Attach the bottom of the slide arm (item 4 or 14) to the offset arm of the lock release mechanism. Use two flat washers (item 8), two lockwashers (item 9), and two hex nuts (item 10). Do not tighten until parts are adjusted.

Step 6
Adjust the length of the slide arm assembly. With proper adjustment of the slide arm, the safety lock (in “AMTOP” operating handle) should release just before the master door is fully latched. Lengthen slide arm if safety lock releases too soon. shorten slide arm if safety lock releases too late.

Step 7
Attach the cover interblock blade (item 11), provided by Hoffman, to the tapped spacer on the door using the bottom set of mounting holes. Used the two screws (item 12) and lockwashers (item 13). The cover interlock blade prevents the door from being opened when the “AMTOP” operating handle is in the “ON” position. This blade may be adjusted up or down to hook properly on the interlock lever extension. The blade (item 11) must be positioned so the bottom edge of blade clears the interlock lever extension by 1/4 inch when “AMTOP” operating handle is in extreme “OFF” position.

Step 8
Drill and tap holes in panel for disconnect required. See table for location of disconnect centerlines. See Westinghouse instructions for location and size of mounting holes.

Step 9
Install panel in enclosure.

Step 10
Mount disconnect switch or circuit breaker on panel using Westinghouse instructions and parts.

© 2018 Hoffman Enclosures Inc.

For Two-Door, Floor-Mounted Enclosures with Disconnect on Centerpost

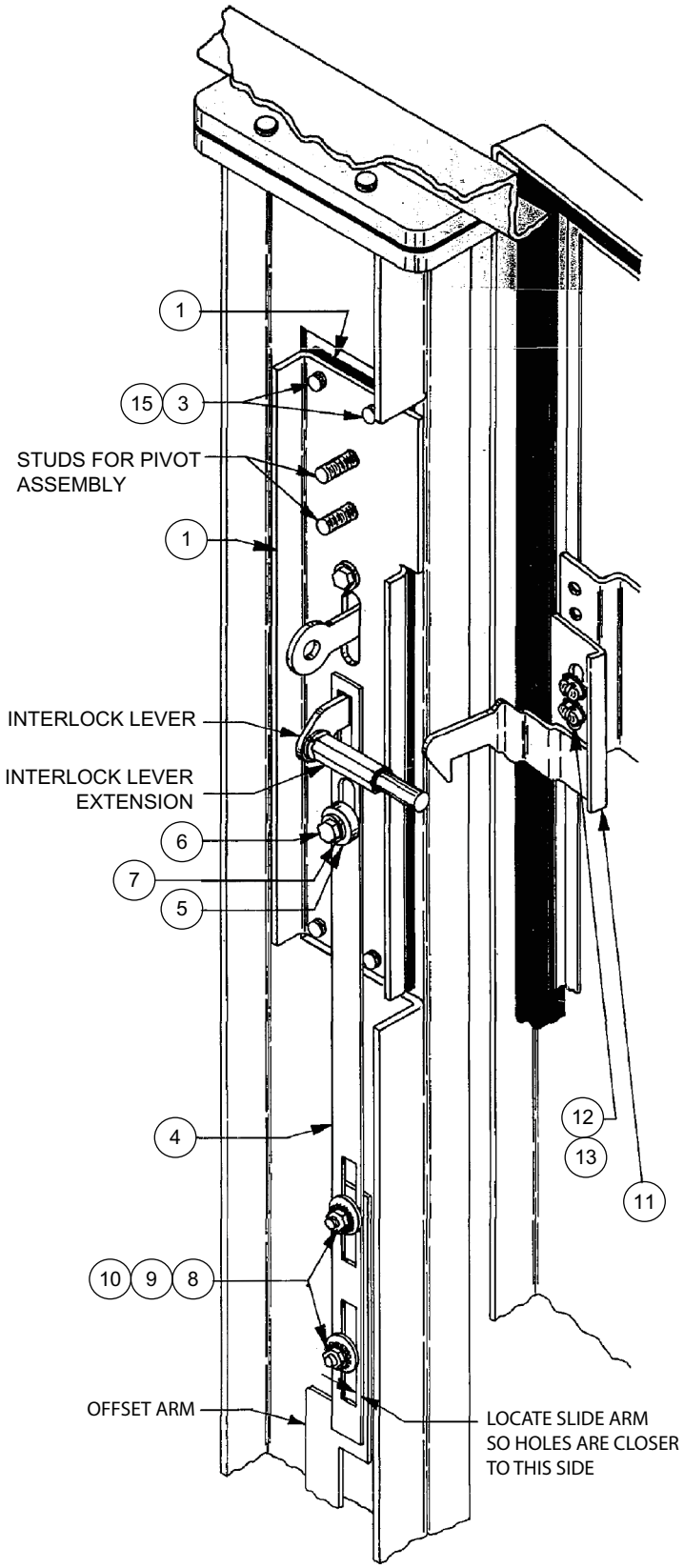

© 2018 Hoffman Enclosures Inc.